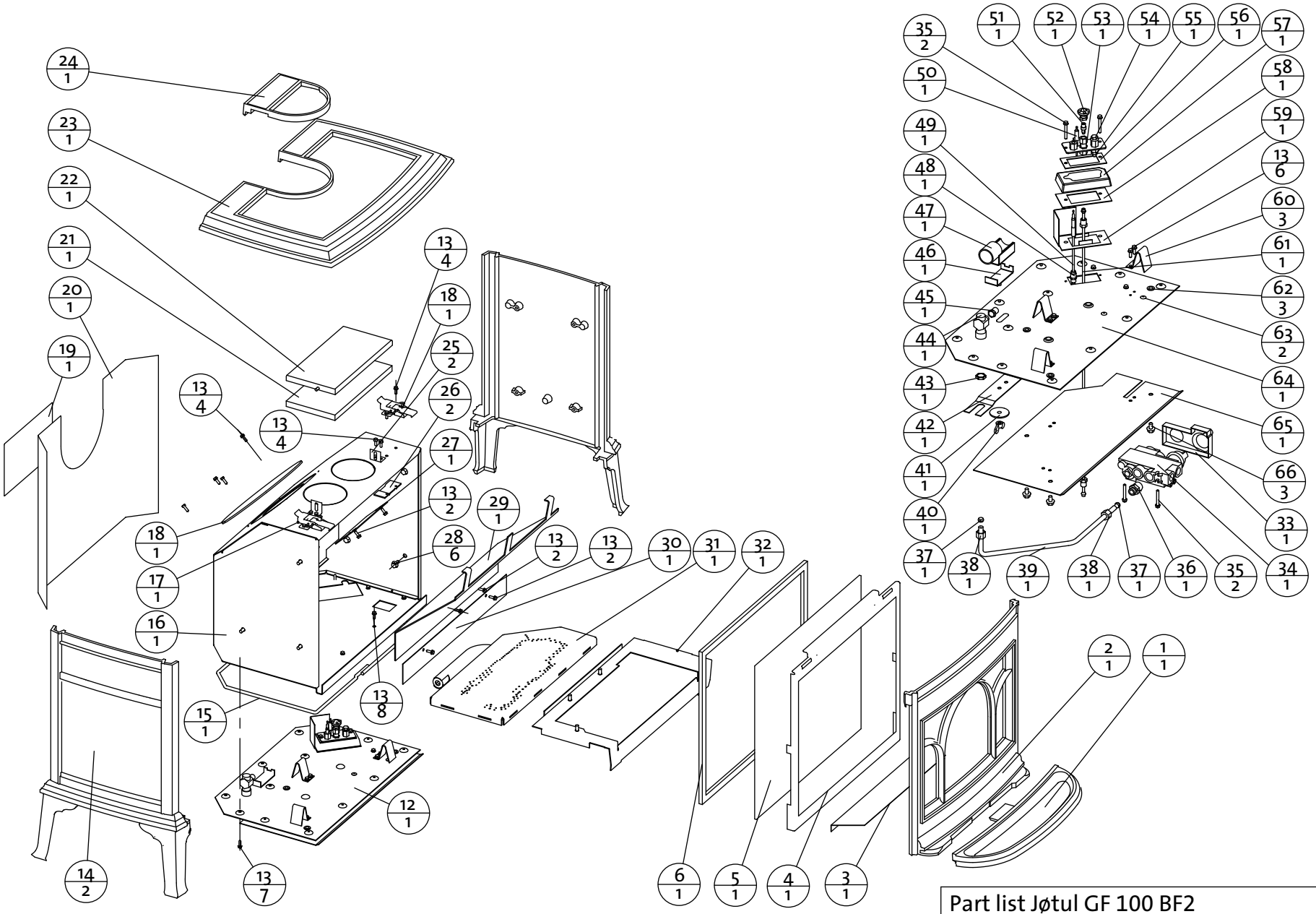

Part list Jøtul GF 100 BF2		
Jøtul AS Fredrikstad, Norway	Drawing no. 3-2952-P01	Date: Aug. 2005