TEST REPORT

TEST OF A NON-CATALYTIC WOOD BURNING STOVE FOR EMISSIONS AND EFFICIENCY

PER EPA METHODS ALT-125, ASTM E2515, ASTM E3053 and CSA B415.1,

Client:

Jotul

55 Hutcherson Dr,
Gorham, USA
04038

Model Name: F 35

Attention: Rafael Sanchez

TESTED BY:
Services Polytests inc.
695-B Gaudette
St-jean-sur-Richelieu, QC, J3B 7S7

TEST DATES: February 23rd and 24th 2021
REPORT DATE: March 16th 2021
Revision 1: December 13th 2021
Project number: PI-20250

Tested:

Maxime Martin

written by:

Danick Power, P. Eng

Verified by third party certifier: Intertek

SUMMARY

1 Introduction 4
1.1 General 4
1.2 Test unit information 4
1.3 Results 5
1.4 Pretest information 5
2 Summary of test results 5
2.1 Model identification 5
2.2 Laboratory information 5
2.3 Test condition Summary 6
2.4 Test run results summary 7
2.5 Weighted average summary 8
2.6 Weighted average Final results 8
2.7 Test facility conditions 8
2.8 Dilution tunnel flow rate measurements and sampling data (ASTM E2515) 9
2.9 Dilution tunnel dual train precision 9
3 Process description 10
3.1 Discussion 10
3.2 Unit dimensions 10
3.3 Air supply system 11
3.4 operation during test 12
3.5 Start-up operation 13
3.6 Sampling locations 13
3.7 Drawings 13
3.8 Emissions efficiency testing equipment list 13
4 Sampling methods 13
4.1 Particulate sampling 13
5 Quality assurance 14
5.1 Instrument calibration 14
5.1.1 Gas meters 14
5.1.2 SCALES 14
5.1.3 Gas analyzers 14
5.2 Test method procedures 14

5.2.1 Leak check procedures 14
5.2.2 Tunnel velocity flow measurement 14
5.2.3 Pm sampling proportionality (ASTM E2515) 14

List of revisions

Revision 1: December 13th 2021

- Table 2.3 TYPO, corrected for ambient minimum temperature
- Appendix 1 updated to include SU/H preburn for run 2.1
- Table 2.9 updated to include dual train precision in g/Kg
- Appendix 3 updated with calibration for table of calibration dates
- Table 2.3 typo corrected for preburn duration
- Appendix 8 updated to remove mixing baffle and additional letter signed from the certifier
- Appendix 9 updated with additional picture.

List of appendixes

APPENDIX 1: Raw data, forms and results

APPENDIX 2: Proportionality results

APPENDIX 3: Calibration data

APPENDIX 4: Unit pre burn

APPENDIX 5: Participants

APPENDIX 6: Drawings and specifications

APPENDIX 7: Operator's manual

APPENDIX 8: Photographs of test set up

APPENDIX 9: Test load photographs

APPENDIX 10: Laboratory Operating Procedures

APPENDIX 11: Sample calculations

APPENDIX 12: Volume calculations

APPENDIX 13: Operating instruction

APPENDIX 14: Drawing Air flow pattern

APPENDIX 15: Application for wood stove program

1 INTRODUCTION

1.1 GENERAL

Laboratory

- Location: Services Polytests Inc., 695-B Gaudette St-jean-sur-Richelieu QC, Canada J3B 7S7
- Elevation: 100 feet above sea level

Test program

- Purpose: unit qualification NSPS 2020 cord wood
- Test dates: February 23rd and 24th 2021
- Test methods used:
    - Particulate emissions: ASTM E3053-17; ASTM E2515-11 methods ALT-125 as referred into 40 CFR Part 60 Subpart AAA
    - Efficiency: CSA B415.1-10

1.2 TEST UNIT INFORMATION

General

- Manufacturer: Jotul
- Product type: wood heater,
- Combustion system: non-catalytic
- Unit tested: F 35

Particularities

- The F 35 is a unique model to the Jøtul wood heater product line.

In Summary:

- A medium north /south loading adjustable-rate free standing non-catalytic wood heater employing a stepped baffle secondary combustion technology. The unit is composed of primarily a steel fire box and cast-iron exterior construction.

1.3 RESULTS

Emission results obtained

- Weighted Average Emissions Rate: 1.16 g/hr
- Weighted Average Overall Efficiency: 68.47 %

Conformity: NSPS Phase 2020, cord wood test method

1.4 PRETEST INFORMATION

Unit condition: The unit was received by carrier during February 2021 in good condition. The 50hrs of aging was made by the manufacturer's representative R&D Laboratory at medium heat draw before the official emission testing series tests.

Set up

- Venting system type: 6 inches diameter inch steel pipe and insulated chimney
- System height from floor: 15 feet
- Particularities: There is no optional fan for this wood heater.

2 SUMMARY OF TEST RESULTS

2.1 MODEL IDENTIFICATION

Model name number	F 35
Manufacturer	JOTUL
address	55 Hutcherson Dr, Gorham, USA,04038
appliance category	WOODSTOVE
Usable Firebox Volume – ft3	1.57
Catalytic/Non-Cat	Non-Cat
convection air fan (no, standard, Optional)	None

2.2 LABORATORY INFORMATION

Testing laboratory	Polytests Services
address	695-B Gaudette, St-jean-sur-richelieu
ISO/ Accreditation info	17025
Dates tested	February 23rd and 24th 2021
Test Methods / Standard	ALT-125
Dilution Tunnel Inside diameter – in	8
Filter diameter	47
Filter material	PTFE Pall

2.3 TEST CONDITION SUMMARY

Model Name(s) / number(s)	F 35			
Usable firebox Volume-ft3	1.57			
Convection Air Fan (No, Standard, Optional)	None			
Test runs #	1,1	1,2	SU/H preburn for run 2.1	2.1
Date tested	February 23rd 2021	February 23rd 2021	February 24th 2021	February 24th 2021
test run category (L, M, H)	H	L	No sampling	M
average barometric pressure – in Hg	29,85	29,85	30,02	30,02
Max observe Ambient temp. °F	71,56	71,57	71,90	71,96
Min observe Ambient Temp °F	66,03	68,25	68,97	68,11
Max observes Filter temp °F	89,76	87,16	87,02	87,34
Run air settings				
Primary (measured up from minimum)	full open	full close	full open	half way
Secondary (measured up from minimum)	fix	fix	Fix	fix
Convection air setting	None	None	None	None
Test fuel load				
Cordwood fuel species	Oak	Oak	Oak	Oak
specific Gravity (from Table 1)	0,66	0,66	0,66	0,66
Higher heating value - Btu/lb (from Annex A1)	8690	8690	8690	8690
Nom. Test fuel piece length - in	16	16	16	16
Number of test fuel pieces	5	5	5	5
Test fuel Weight				
Kindling - as fired lb.	3,10	NA	3,00	NA
Kindling Wt. - as % of test fuel load	19,8%	NA	19,1%	NA
Kindling Moisture % Db	9,0	NA	9,0	NA
Kindling Kg DB	1,29	NA	1,25	NA
SU Fuel Wt- as fired lb	4,50	NA	4,51	NA
SU Fuel wt. - as % of test fuel load	28,8%	NA	28,7%	NA
SU Fuel moisture - % DB	20,0	NA	20,0	NA
SU fuel- Kg DB	1,70	NA	1,71	NA
Test Fuel Load - As Fired lb	15,63	18,71	15,71	19,25
Ave. Test Fuel Load MC % DB	20,69	22,72	23,13	21,32
Test Fuel Load - kg DB	5,87	6,92	5,79	7,20
Test fuel Loading density lb./ft3	9,96	11,92	10,01	12,26
Residual SU fuel wt. - as fired lb.	2,7	NA	2,7	NA
Residual SU fuel wt.- as % of test fuel load	17,3%	NA	17,2%	NA
Test run duration - minutes	96	405	103	250
Test run duration - h	1,60	6,75	1,72	4,17
Test fuel load wt at the end of the test - as fired lb	1,5	0	1,5	0
total fuel burned kg Db	6,96	6,92	6,84	7,20
% test fuel load wt at end of the test	9,6%	0,0%	9,5%	0,0%

2.4 TEST RUN RESULTS SUMMARY

Model name / number	F 35		
Usable Firebox volume	1.57		
Convection air Fan (no, Standard, option)	None		
Test runs nu.	1,1	1,2	2.1
Date tested	February 23rd 2021	February 23rd 2021	February 24th 2021
Test run category	H	L	M
Burn rate - Kg/hr DB	4,45	1,02	1,73
Burn rate as % of low to high Midpoint	NA	NA	63%
Burn duration - h	1,60	6,75	4,17
Heat output btu/hr	59 443	13 533	22 166
Average Dilution Tunnel Flow Rate - dscfm	329,4	349,0	345,0
Average Sample Flow Rates - dscfm			
Train 1	0,1818	0,1838	0,1837
train 2	0,1778	0,1754	0,1781
Total PM Emissions - g			
Train 1 g	4,85	3,61	3,56
train 2 g	4,97	3,58	3,29
Average	4,91	3,59	3,43
PM emission train precision %	1,14%	0,34%	3,92%
PM emission g/kg	0,71	0,52	0,48
PM emission rate g/h	3,07	0,53	0,82
Total Co Emission g	130,4	459,0	254,8
Co emission Rate g/h	113,4	68,0	61,1
1st hour emission rate g/h	4,2	1,7	2,1
Overall Efficiency - CSA B415,1			
% HHV Basis	67,85%	69,00%	68,24%
% LHV Basis	73,01%	74,24%	73,43%

2.5 WEIGHTED AVERAGE SUMMARY

Model name / number	F 35		
Usable Firebox volume	1.57		
Convection air Fan (no, Standard, option)	None		
average for each test run category	L	M	H
burn rate kg/h DB	1,02	1,73	4,45
PM Emission rate - g/h	0,53	0,82	3,07
Co emission rate - g/h	68,00	61,14	113,38
PM Emission 1-hr Rate - g/h	1,71	2,07	4,17
Overall Efficiency - CSA B 415,1			
% HHV Basis	69,0%	68,2%	67,9%
% LHV Basis	74,2%	73,4%	73,0%
Heat output - Btu/hr	13533	22166	59443
Category weighting	0,4	0,4	0,2

2.6 WEIGHTED AVERAGE FINAL RESULTS

ASTM E 3053 Weighted averages			
PM Emission Rate - g/h	1,16		
CO Emission Rate g/h	74,3		
PM Emission 1-hr Rate - g/h	2,34		
Overall Efficiency - CSA B415,1			
% HHV Basis	68,47%		
% LHV Basis	73,67%		
Heat output range - Btu/h	13 533	to	59443
Co Arithmetic average g/min	1.35		

2.7 TEST FACILITY CONDITIONS

Run Number	*Room Temperature*		*Barometric pressure*		*Relative humidity*		*Air Velocity*	
	Before	*After*	*Before*	*After*	*Before*	*After*	*Before*	*After*
	(F)	*(F)*	*(in.Hg)*	*(in.Hg)*	*(%)*	*(%)*	*(ft/min)*	*(ft/min)*
1.1	69	72	29,85	29,85	27,5	26,4	0	0
1.2	69	72	29,85	29,85	27,5	26,4	0	0
2.1	73	70	29,97	30,06	23,2	21,6	0	0

2.8 DILUTION TUNNEL FLOW RATE MEASUREMENTS AND SAMPLING DATA (ASTM E2515)

Average dilution tunnel measurements				*Sample Data*			
Run Number/ test category	*Burn Rate (Min)*	*Volumetric Flow Rate (dscf/min)*	*Total Temperatures (°R)*	*Volume sampled (DSCF)*		*Particulate catch (mg)*	
				1	*2*	*1*	*2*
1.1	96	329,44	577,92	17,451	17,073	2,80	2,80
1.2	405	348,96	545,21	74,454	71,018	1,90	1,80
2.1	250	345,00	556,51	45,930	44,524	2,00	1,80

2.9 DILUTION TUNNEL DUAL TRAIN PRECISION

Run Number / test category	*Sample Ratio*		*Total Emission (g)*			
	Train 1	*Train 2*	*Train 1*	*Train 2*	*% Deviation*	*Deviation g/Kg*
1.1	1812,32	1852,46	4,85	4,97	1,14%	0,007
1.2	1898,20	1990,04	3,61	3,58	0,34%	0,004
2.1	1877,86	1937,17	3,56	3,29	3,92%	0,037

3 PROCESS DESCRIPTION

3.1 DISCUSSION

The wood heater has been received in a good shape by a carrier in February 2021. Maximum burn rate has been done on February 23rd 2021 followed by a minimum burn rate. On February 24th 2021 the medium burn rate as been done. Aging have been done by the manufacturer's representative R&D Laboratory (Dragonfyre LLC) at medium heat draw before the official emission testing series tests, all data can be found in appendix 4.

3.2 UNIT DIMENSIONS

Baffle

- Location: between top of combustion chamber and hearth
- Restriction: 2.750 X 18.750 inches at the front of unit
- Dimensions: covers the hearth area minus the restriction at front
- Material: Stainless Steel, covered by ½ thick ceramic blanket

Firebox material

- Firebrick 1 ¼ thick lining cover all sides and bottom

Flue gas exhaust

- Location: Back
- Dimensions: 6 inches
- Material: Cast Iron

Gasket

- Door: Fiberglass rope. 5/8" dia. Low density
- Glass: Fiberglass rope. 1/4" dia. Low density
  Refer to appendix 6 for all details and location

Overall unit dimension

- Usable volume: 1.57 cuft.
- Refer to appendix 12 for volume calculation
- Overall heater dimension: 23-inch-wide 26.750-inch-deep 26.250 inch high

Convection fan

- None

Catalyst

- None

3.3 AIR SUPPLY SYSTEM

Description

- Primary air: from the bottom through an air wash above the door.
- Secondary air: From the bottom of the stove to the back, up the back wall and into the secondary baffle and distributed by three rows of holes into the firebox

Characterization

The following table shows the inlet and outlet sections of each system. The air introduction system number is referred to on a set of drawings in Appendix 6.

AIR INTRODUCTION SYSTEM		INLET (1) sq. in.			OUTLET
Identification	Type	Imin	Imax	Controlled	(sq. in.)
A *	Primary	0.598	2.479	Yes	3.009
B *	Secondary	2.732	2.732	No	1.782
C *	Pilot	0.222	0.222	No	0.083

* This section would be filled by measuring and comparing with the manufacturer's drawings included in the test report.

<u>Legend</u>
Identification: Tag name referred to on drawings in Appendix 14, section airflow pattern
Type: Characterization of air intake
Imin: Minimum air intake of a particular air channel
Imax: Maximum air intake of a particular air channel
Controlled: Determines if a provision for air control is present
Outlet: Total air outlet of a particular air channel

3.4 OPERATION DURING TEST

All runs have been found appropriate, no anomalies happened and all runs below have been validate and found compliant. All load logs have been positioned front to back direction into the firebox. No logs have been debarked; all logs were split to meet individual and total load weight range for the firebox. None of them have been squared.

Run #1.1
This run was performed on February 23rd 2021. It lasted 96 minutes and a maximum burn rate was obtained at 4.45 kg/hr & emission at 3.1 gr/hr. The air inlet control was at the maximum setting.

Run #1.2
This run was performed on February 23rd 2021. It lasted 405 minutes and a minimum burn rate was obtained at 1.02 kg/hr & emission at 0.53 gr/hr. The air inlet damper was at the minimum (lowest) setting.

Run #2.1
This run was performed on February 24th 2021. It lasted 250 minutes and a medium burn rate was obtained at 1.73 kg/hr & emission at 0.82 gr/hr. The air inlet damper was at the medium setting (half way between open and close).

- Details: Refer to the front page of each test run data sheets found in appendix for the detailed test sequence showing air supply settings and adjustments, fuel bed adjustments and operational specifics of the test unit.

Test fuel load

- Type of wood: Red Oak, 18 to 28% dry basis moisture content
- Description: for each test, description of the fuel load is found on the front page of each test run data sheet together with photograph in appendix.

3.5 START-UP OPERATION

The complete manufacturer's firing procedure of each burn rate category is fully described in appendix 13.

3.6 SAMPLING LOCATIONS

Particulate samples are collected from the dilution tunnel at a point 15 feet from the tunnel entrance. The tunnel has two elbows in the system ahead of the sampling section. The sampling section is a continuous 20-foot section of 8-inch diameter pipe straight over its entire length. Tunnel velocity pressure is determined by a standard pitot tube located 48 inches from the beginning of the sampling section. Thermocouple is installed on the pitot tube to measure the dry bulb temperature. MC is assumed, as allowed, to be 4%. Tunnel samplers are located 56 inches downstream of the pitot tube and 24 inches upstream from the end of this section.

3.7 DRAWINGS

Various drawings of the stack gas sampling train and of dilution tunnel system are found in Appendix 6.

3.8 EMISSIONS EFFICIENCY TESTING EQUIPMENT LIST

The complete test equipment list together with all corresponding calibration data can be found in Appendix 3.

4 SAMPLING METHODS

4.1 PARTICULATE SAMPLING

Particulates were sampled in strict accordance with ASTM E2515. This method uses two identical sampling systems with Gelman A/E 61631 binder free (or equivalent), 47 mm diameter EMFAB TX40H 120-WW Pall filters. The dryers used in the sample systems are filled with "Drierite" before each test run.

5 QUALITY ASSURANCE

5.1 INSTRUMENT CALIBRATION

5.1.1 GAS METERS

At the conclusion of each test program the gas meters are verified using the reference dry gas meter. This process involves sampling the train operation for 1 cubic foot of volume. With readings made to .01 fr', the resolution is 1 %, giving an accuracy higher than the 2% required by the standard.

5.1.2 SCALES

Before each test program, the different scales used are checked with traceable calibration weights to ensure their accuracy.

5.1.3 GAS ANALYZERS

The continuous analyzers are zeroed and spanned before each test with NBS traceable gases. A mid-scale multi-component calibration gas is then analyzed (values are recorded). At the conclusion of a test, the instruments are checked again with zero, span and calibration gases (values are recorded only). The drift in each meter is then calculated and must not exceed 5% of the scale used for the test.

5.2 TEST METHOD PROCEDURES

5.2.1 LEAK CHECK PROCEDURES

Before and after each test, each sample train is tested for leaks. Leakage rates are measured and must not exceed 0.02 CFM or 4% of the sampling rate. Leak checks are performed checking the entire sampling train. Pre-test and post-test leak checks are conducted with a vacuum of 5 inches of mercury. Vacuum is monitored during each test and the highest vacuum reached is then used for the post-test vacuum value. If leakage limits are not met, the test run is rejected. During these tests, the vacuum is typically less than 2 inches of mercury. Thus, leakage rates reported are expected to be much higher than actual leakage during the tests.

5.2.2 TUNNEL VELOCITY FLOW MEASUREMENT

The tunnel velocity is calculated from a center point pitot tube signal multiplied by an adjustment factor. This factor is determined by a traverse of the tunnel as prescribed in EPA Method 1. Final tunnel velocities and flow rates are calculated from EPA Method 2, Equation 6.9 and 6.10. (Tunnel cross sectional area is the average from both lines of traverse.)

Pitot tubes are cleaned before each test and leak checks are conducted after each test.

5.2.3 PM SAMPLING PROPORTIONALITY (ASTM E2515)

Proportionalities were calculated in accordance with ASTM E2515. The data and results are found in appendix.

APPENDIX 1: Raw data, forms and results

POLYTESTS
TESTING THROUGH YOUR REALITY

Date: 2021-02-23 Manufacturer: Jotul Model: F 35
Project #: PT 20250 Run: 1 Tech: M M Reviewer: RP

- kindling 76 LBS START FIRE
- 1 min torche
- After 1 min close Door
- At 27 LBS insert load
- close Door immedially
- At 47 LBS stop pompe
- At 300 LBS insert load
- close Door immedially
- At 6 min close air inlet (1/2)
- At 16,00 LBS close air inlet (11 min) to the Lowest setting

TEST LOAD CONFIGURATION

POLYTESTS
TESTING THROUGH YOUR REALITY

PRE / POST CHECKS

Date: 2021-02-23 Manufacturer: Jotul Model: F35

Project #: pT 20250 Run: 1 Tech: MM Reviewer: DO

Moisture Meter Calibration Check:

Equipment #	Time	12%	22%
EM-191	7:00	ok	ok

Facility Conditions:

	Pre-Test	Post-Test
Air Velocity from less than 2 feet	0 (max50 Fpm)	0 (max50 Fpm)
Smoke Capture Check (Tunnel velocity)	ok	NA
Picture 4 sides	ok	ok

Wood Heater Conditions:

Date Wood Heater Stack Cleaned	2021-02-~~25~~ 23 MM
Date Dilution Tunnel Cleaned	2021-02-~~25~~ 23 MM
Induced Draft Check (max 0.005 H2O)	ok
Traverse before ignition	ok

Temperature System:

Ambient (65°-90°F)	ok °F

Proportional Checks:

Thermocouple check	ok
Pitot Clean	ok
Pitot verification	ok

POLYTESTS
TESTING THROUGH YOUR REALITY

SAMPLING EQUIPMENT CHECK OUT

Date: 2021-02-23 Manufacturer: Jofel Model: F35

Project #: PT 20250 Run: 1 Tech: MM Reviewer: DP

Leakage Checks Tunnel Samplers

High fire test	System 1st hour		System 1		System 2	
Unplugged Flow Rate = .25cfm	Pre-Test ASTM (-15) CSA B415 (-5)	Post-Test (max test)	Pre-Test ASTM (-15) CSA B415 (-5)	Post-Test (Max test)	Pre-Test ASTM (-15) CSA B415 (-5)	Post-Test (Max test)
Vacuum (inches Hg.)	-15	-15	-15	-15	-15	-15
Final 1minute DGM (Liter)	38225920	38272646	38225990	38272662	142037.46	142544.00
Initial 1minute DGM (Liter)	38225916	38272641	38225970	38272660	142037.44	142544.00
Change © (Liter)	004	0.05	0.20	0.02	∅	∅
Allowable leakage .04 x Sample rate or 0.28Lpm CSA B415 (0.56)						
Check OK	ok	ok	ok	ok	ok	ok

Low medium fire test	System 1st hour		System 1		System 2	
Unplugged Flow Rate = .25cfm	Pre-Test ASTM (-15) CSA B415 (-5)	Post-Test (max test)	Pre-Test ASTM (-15) CSA B415 (-5)	Post-Test (Max test)	Pre-Test ASTM (-15) CSA B415 (-5)	Post-Test (Max test)
Vacuum (inches Hg.)	-15	-15	-15	-15	-15	-15
Final 1minute DGM (Liter)	38277748	38496830	38277765	38496851	142546.24	244528.25
Initial 1minute DGM (Liter)	38277745	38496826	38277763	38496841	142546.24	244528.25
Change © (Liter)	003	004	0.02	010	∅	∅
Allowable leakage .04 x Sample rate or 0.28Lpm CSA B415 (0.56)						
Check OK	ok	ok	ok	ok	ok	ok

POLYTESTS
TESTING THROUGH YOUR REALITY

SAMPLING EQUIPMENT CHECK OUT

Date: 2021-02-23 Manufacturer: Jo fol Model: F35

Project #: PI 2250 Run: 1 Tech: MM Reviewer: TP

Leakage Checks Flue Gas Sampler

Plugged Probe	Pre-Test	Post Test
Vacuum (inches Hg.)	-5	-5
Rotameter Reading (mml/min.)	0	0
Flow Rate (lpm)	1.5	1.5
Allowable (.02 x Sample Rate)	30	30
Check OK	ok	ok

Leakage Checks Pitot

Plugged Probe	Pre-Test 3 H2o static	Pre-Test 0.4-0.5 H2o velocity	Post Test 3 H2o Static	Post Test 0.4-0.5 H2o velocity
Vacuum (inches Hg.)	3	.4	3	.5
Check OK (no change after 15 sec.)	ok	ok	ok	ok

POLYTESTS
TESTING THROUGH YOUR REALITY

PRE-TEST SCALE AUDIT

Date: 2021-02-23 Manufacturer: Jofel Model: F35

Project #: PI 20250 Run: 1 Tech: MM Reviewer: TP

Scale Type	Audit		Measured Weight
	Equipment #	Weight	
Platform	EM-090	44 lbs, Class F	44 lbs
Wood	EM-090	44 lbs, Class F	44 lbs
Wood	EM-205	22,000 lbs, Class F	22,00 lbs
Analytical	EM-128	100 mg, Class S	100 mg
Analytical	EM-129	200 g, Class S	200 g

LIMITS OF WEIGHT RANGES

ANALYTICAL SCALE: ..... 50%-150% of dry filter weight, ± 0.1 mg
PLATFORM SCALE.....20%-80% of ideal test load weight, ± 0.1 lbs or 1%
WOOD SCALE.....20%-80% of ideal test load weight, ± 0.01 lbs or 1%

POLYTESTS
TESTING THROUGH YOUR REALITY

CONTINUOUS ANALYZERS

Date: 2021-02-23 Manufacturer: Jofel Model: F35

Project #: PT 2025 Run: 1 Tech: MM Reviewer: DR

FOR TUNNELS < 12 in

Barometric pressure (P_{bar}) 101.1 (KPa.) Static pressure (P_q) 0.18 (inches w.c.)
Inside diameter: Port A _____ Port B _____.
Tunnel cross sectional area: .1963Ft^2
Pitot tube type: Standard

Traverse Point	Position (inches)			Velocity Head Δ_p (inches H_2O)	Tunnel Temperature (°F)
	6 po	7 po	8 po		
A- Centroid	3.00	3.50	4	0.068	68.14
B - Centroid	3.00	3.50	4	0.069	68.26
A-1	0.40	0.50	0.50	0.054	68.14
A-2	1.50	1.75	2	0.064	68.26
A-3	4.50	5.25	6	0.070	68.26
A-4	5.60	6.5	7.5	0.054	68.25
B-1	0.40	0.50	0.50	0.055	68.26
B-2	1.50	1.75	2	0.066	68.20
B-3	4.50	5.25	6	0.075	68.20
B-4	5.60	6.5	7.5	0.054	68.26
				AVERAGE	

$$v_s = K_p C_p (\sqrt{\Delta p})_{avg} \sqrt{\frac{(T_s)_{avg}}{P_s M_s}}$$

Where,
C_p = pitot tube coefficient, dimension less = 0.99 for standard pitot.
Δ_p = manometer reading (inches H_2O)
T_s = average absolute dilution tunnel temperature (°F + 460)
P_s = absolute dilution tunnel gas pressure or $P_{bar} + P_{qg}$
P_q = static pressure $\frac{\text{in. } H_2O}{\{\ 13.6\ \}}$
M_s = 28.56, wet molecular weight of stack gas (alternatively, it may be measured)
K_p = 85.49 pitot tube constant, (conversion factor for English units)

_$\Delta_p$avg. = average of the square roots of the velocity heads (Δ_p) measured at each traverse point.

POLYTESTS
TESTING THROUGH YOUR REALITY

CONTINUOUS ANALYZERS

Date: 2021-02-23 Manufacturer: Jofvl Model: F35

Project #: OT 20250 Run: 1 Tech: MM Reviewer: DP

Pre-Test (Adjust and Record)

	ZERO		SPAN		CAL. (Record Only)	
CO	0	0	3.974	3.000	1.009	1.000
Tolerance CO	0	+/- 0.02	0.026	+/- 0.15	0.009	+/- 0.05
CO_2	0	0	18.08	18.00	9.72	10.00
Tolerance CO2	0	+/- 0.02	0.08	+/- 0.5	0.28	+/- 0.5
O_2 informative CSA B415 calculated value	na	na	na	na	na	na
	Actual	Should Be	Actual	Should Be	Actual	Should Be

Post Test (Record Only)

	Zero	Span	Cal.	Zero Drift	Limit	Span Drift	Limit	Cal. Drift	Limit	OK?	Not OK*
CO	0	3.980	1.002	0	0.02	0.006	0.15	0.007	0.05	✓	
CO_2	0	18.02	9.77	0	0.02	0.06	0.5	0.05	0.5	✓	

POLYTESTS
TESTING THROUGH YOUR REALITY

TEST DATA LOG

Date: 2021-02-23 Manufacturer: Jo fol Model: F35

Project #: pI 20250 Run: 1 Tech: MM Reviewer: DP

RAW DRY GAS METER READINGS

		System 1	System 2	Blank
High fire test	Final (Liter)	382 775,26	142 541,90	242 490,73
	Initial (Liter)	382 260,91	142 038,35	242 078,45
Low medium fire test	Final (Liter)	384 966,95	144 699,30	244 528,25
	Initial (Liter)	382 778,85	142 547,38	242 490,73

AMBIENT CONDITIONS

	Before	After
Barometer (kPa):	101,1	101,1
Dry Bulb (F):	69,2	72,1
Humidity (%):	27,5	26,4

POLYTESTS
TESTING THROUGH YOUR REALITY

FUEL DATA

Date: 2021-02-23 Manufacturer: Jotul Model: F35

Project #: PI 20250 Run: 1 Tech: MM Reviewer: [illegible]

FUEL DESCRIPTION:

Type of wood:

KINDLING AND START-UP LOAD

Piece Size	Weight	Meter Moisture Content (% dry)				
x x in.	3.10 lbs.	9		9		9
x x in.	lbs.					
x x in.	4.50 lbs.	20		20		20
x x in.	lbs.					
x x in.	lbs.					
x x in.	lbs.					
x x in.	lbs.					
x x in.	lbs.					
x x in.	lbs.					

HIGHFIRE TEST LOAD

Piece Size	Weight	Meter Moisture Content (% dry)				
3.25 x 3.50 x 16 in.	3.342 lbs.	241		190		184
2.50 x 3.00 x 16 in.	2.464 lbs.	202		216		186
4.00 x 3.00 x 16 in.	3.388 lbs.	255		221		20.9
x x in.	lbs.					
3.50 x 3.50 x 16 in.	3.964 lbs.	226		201		190
3.00 x 2.75 x 16 in.	2.474 lbs.	186		19°		19°
x x in.	lbs.					
x x in.	lbs.					
x x in.	lbs.					

POLYTESTS
TESTING THROUGH YOUR REALITY

FUEL DATA

Date: 2021-02-23 Manufacturer: Jotul Model: F35

Project #: PL 20250 Run: 1 Tech: MM Reviewer: DL

FUEL DESCRIPTION:

Type of wood:

LOW OR MEDIUM TEST LOAD

Piece Size	Weight		Meter Moisture Content (% dry)				
400 x 300 x 16 in.	3282	lbs.	251		216		203
400 x 300 x 16 in.	3462	lbs.	246		213		206
3 1/4 x 350 x 16 in.	4526	lbs.	231		219		210
mm x ~~350~~ x in.		lbs.					
400 x 350 x 16 in.	4472	lbs.	276		233		214
375 x 250 x 16 in.	2972	lbs.	235		211		216
x x in.		lbs.					
x x in.		lbs.					
x x in.		lbs.					
x x in.		lbs.					
x x in.		lbs.					
x x in.		lbs.					
x x in.		lbs.					
x x in.		lbs.					

POLYTESTS
TESTING THROUGH YOUR REALITY

DILUTION TUNNEL PARTICULATE SAMPLER DATA

Date: 2021-02-22 Manufacturer: Jotul Model: F 35

Project #: PT 20 250 Run: 1 Tech: M M Reviewer: [illegible]

		HIGH FIRE TEST FILTERS							
		SYSTEM 1 – 1st hour				SYSTEM 1			
Pre-test Weight Record		Probe & Housing Number	Front Filter Number	Back Filter Number	gaskets	Probe & Housing Number	Front Filter Number	Back Filter Number	gaskets
Date	Time	05	21-	22	15	07	23-	24	29
2021-02-22	17:00	61,5024	0,1782		35,4043	61,4750	0,1777		34,3244
2021-02-23	8:00	61,5024	0,1782		35,4044	61,4749	0,1776		34,3245

		SYSTEM 1 – 1st hour				SYSTEM 1			
Post-test Weight Record		Probe & Housing Number	Front Filter Number	Back Filter Number	gaskets	Probe & Housing Number	Front Filter Number	Back Filter Number	gaskets
Date	Time	05	21-	22	15	07	23-	24	29
2021-02-23	12:00	61,5033	0,1806		35,4065	61,4754	0,1783		34,3266
2021-03-01	8:00	61,5026	0,1803		35,4044	61,4751	0,1780		34,3246
2021-03-02	8:00	61,5025	0,1803		35,4045	61,4749	0,1780		34,3246

POLYTESTS
TESTING THROUGH YOUR REALITY

DILUTION TUNNEL PARTICULATE SAMPLER DATA

Date: 2021-02-22 Manufacturer: Jotul Model: F35

Project #: PI 20250 Run: 1 Tech: MM Reviewer: DP

		HIGH FIRE TEST FILTERS				
		SYSTEM 2				
Pre-test Weight Record		Probe & Housing Number	Front Filter Number	Back Filter Number	gaskets	Blank
Date	Time	33	25-	26	37	27
2021-02-22	17:00	109,3632	0,1774		35,1854	0,0891
2021-02-23	8:00	109,3633	0,1775		35,1853	0,0890

		SYSTEM 2				
Post-test Weight Record		Probe & Housing Number	Front Filter Number	Back Filter Number	gaskets	Blank
Date	Time	33	25-	26	37	27
2021-02-23	12:00	109,3642	0,1787		35,1875	~~0,0898~~ ~~0,0890~~ 0,0891
2021-03-01	8:00	109,3635	0,1798		35,1854	0,0891
2021-03-02	8:00	109,3635	0,1799		35,1855	0,0891

POLYTESTS
TESTING THROUGH YOUR REALITY

DILUTION TUNNEL PARTICULATE SAMPLER DATA

Date: 2021-02-22 Manufacturer: Jotul Model: F35

Project #: PT 20250 Run: 1 Tech: MM Reviewer: DO

		MEDUIM / LOW FIRE TEST FILTERS							
		SYSTEM 1 – 1st hour				SYSTEM 1			
Pre-test Weight Record		Probe & Housing Number	Front Filter Number	Back Filter Number	gaskets	Probe & Housing Number	Front Filter Number	Back Filter Number	gaskets
Date	Time	17	428- 429		8	30	430- 431		12
2021-02-22 MM	~~8:00~~ MM 17:00	108 9482	0 1771		34 0653	110 2150	0 1772		34 3163
2021-02-23 MM	8:00	108 9483	0 1771		34 0652	110 2151	0 1773		34 3164

		SYSTEM 1 – 1st hour				SYSTEM 1			
Post-test Weight Record		Probe & Housing Number	Front Filter Number	Back Filter Number	gaskets	Probe & Housing Number	Front Filter Number	Back Filter Number	gaskets
Date	Time	17	428- 429		8	30	430 431		12
2021-02-23	20:00	108 9496	0 1783		34 0672	110 2158	0 1782		34 3180
2021-03-01	8:00	108 9484	0 1778		34 0653	110 2153	0 1779		34 3165
2021-03-02	8:00	108 9484	0 1778		34 0653	110 2153	0 1779		34 3166

POLYTESTS
TESTING THROUGH YOUR REALITY

DILUTION TUNNEL PARTICULATE SAMPLER DATA

Date: 2021-02-22 Manufacturer: Jotul Model: F 35

Project #: pT 20250 Run: 1 Tech: MM Reviewer: BO

		MEDUIM / LOW FIRE TEST FILTERS				
		SYSTEM 2				
Pre-test Weight Record		Probe & Housing Number	Front Filter Number	Back Filter Number	gaskets	Blank
Date	Time	36	432	433	18	434
2021-02-22	17:00	107,7233	0,1780		34,1391	0,0890
2021-02-23	8:00	107,7234	0,1781		34,1392	0,0890

		SYSTEM 2				
Post-test Weight Record		Probe & Housing Number	Front Filter Number	Back Filter Number	gaskets	Blank
Date	Time	36	432	433	18	434
2021-02-23	20:00	107,7243	0,1805		34,1406	0,0893
2021-03-01	8:00	107,7237	0,1795		34,1394	0,0890
2021-03-02	8:00	107,7236	0,1795		34,1394	0,0890

Paramètres

Tous les facteurs de corrections et autres paramètres qui peuvent être modifiés par l'utilisateur du fichier sont regroupés ici.

Code verrouillage:	JOT	

Description du test

Test standard	EPA	
Run #	1	
Date	2021-Feb-23	
Technicien	m.m	
Project #	pi 20250	

Description de l'unité

Manufacturier	jotul	
Modèle	F 35	
Combustion system	Non-Cat	
Appliance type	wood stove	
Firebox volume	1,57	cu ft.
Appliance weight empty	n.a	lbs
Fan (no, Standard, Option)	No	

Paramètres du test

Logging time	1	min
Manufacturer's rated heat output	n.a	BTU/h Donnée fournie par le manfacturier
Targeted category	1	
Targeted output	n.a	BTU/h
Cp steel	n.a	BTU/lb-°F

Échantillonnage

Blank sampling rate	0,20	cuft/min
Internal probe diameter	0,18	in.
Calibration Factor (DGM #1):	1,002	Dimensionless
Equipment number (DGM #1):	em 178	
Calibration Factor (DGM #2):	1,001	Dimensionless
Equipment number (DGM #2):	em 318	
Calibration Factor (DGM #3):	0,990	
Equipment number (DGM #3):	em 179	Dimensionless

Tunnel

Targeted tunnel flow rate	350	scfm
Tunnel diameter	8	in.
Molecular weight	29	29 as per ASTM E2515
Pitot tube type	Standard	
Pitot tube coefficient	0,99	Dimensionless

Project nu.	pi 20250
Date	2021-Feb-23
Technicien	m.m

Fuel data

Fuel type	Cord	
Fuel specie	Oak	
HHV	20207,0	kJ/kg
%C	49,5	
%H	6,6	
%O	43,7	
%Ash	0,2	
HHV	8689,9	Btu/lb
LHV	7600,4	Btu/lb

Default Fuel Values

	D. Fir	Oak/Maple
HHV	19 810	20 207
%C	48,73	49,5
%H	6,87	6,62
%O	43,9	43,7
%Ash	0,5	0,2
HHV (Btu/lb)	8519	8690
LHV (Btu/lb)	7451	7600

Adjunct to ASTM E XXXX Wood Heater Cordwood Test Method - May 10, 2017 Version
Cordwood Fuel Load Calculators - 10 lb/ft^3 Nominal Load Density
Core 45-65% of Total Load Weight, Remainder 35-55% of Total Load Weight
Values to be input manually

For All Usable Firebox Volumes - High Fire Test Only

Nominal Required Load Density (wet basis)	10	lb/ft^3			
Usable Firebox Volume	1,57	ft^3			
Total Nom. Load Wt. Target	15,70	lb			
Total Load Wt. Allowable Range	14,90	to	16,50	lb	
Core Target Wt. Allowable Range	7,10	to	10,20	lb	
Remainder Load Wt. Allowable Range	5,50	to	8,60	lb	
					Mid-Point
Core Load Pc. Wt. Allowable Range	2,40	to	3,90	lb	3,15
Remainder Load Pc. Wt. Allowable Range	1,60	to	8,60	lb	5,10
	Pc. #				
Core Load Piece Wt. Actual	1	3,34	lb	In Range	
	2	2,46	lb	In Range	
	3	3,39	lb	In Range	
Core Load Total. Wt. Actual		9,19	lb	In Range	
	Pc. #				
Remainder Load Piece Wt.	1	3,96	lb	In Range	
(1 to 3 Pcs.)	2	2,47	lb	In Range	
	3		lb	NA	
Remainder Load Tot. Wt. Act		6,44	lb	In Range	
Total Load Wt. Actual		15,63	lb	In Range	
Core % of Total Wt.		59%		In Range	45-65%
Remainder % of Total Wt.		41%		In Range	35-55%
Actual Load % of Nominal Target		100%		In Range	95-105%
Actual Fuel Load Density		10,0	lb/ft^3		
Kindling and Start-up Fuel					
Maximim Kindling Wt. (20% of Tot. Load Wt.)		3,13	lb		
Actual Kindling Wt.		3,10	lb	In Range	19,8%
Maximum Start-up Fuel Wt. (30% of Tot. Load Wt.)		4,69	lb		
Actual Start-up Fuel Wt.		4,50	lb	In Range	28,8%
Allowable Residual Start-up Fuel Wt. Range	1,6	to	3,1	lb	Mid-Point
Actual Residual Start-up Fuel Wt.		2,7	lb	In Range	2,3
Total Wt. All Fuel Added (wet basis)		23,23	lb		
High Fire Test Run End Point Range	Low		High		Mid-Point
Based on Fuel Load Wt. (w/tares)	1,4	to	1,7	lb	1,6
Actual Fuel Load Ending Wt.		1,5	lb	In Range	

Fuel Piece Moisture Reading (%-dry basis)							
1	2	3	Ave.		Pc. Wt. Dry Basis		
24,1	19	18,4	20,5	In Range	2,77 lb	1,26	kg
20,2	21,6	18,6	20,1	In Range	2,05 lb	0,93	kg
25,5	22,1	20,9	22,8	In Range	2,76 lb	1,25	kg
22,6	20,1	19	20,6	In Range	3,29 lb	1,49	kg
18,6	19	19	18,9	In Range	2,08 lb	0,94	kg
			NA	NA	NA lb	NA	kg
Total Load Ave. MC (%-dry basis)			20,7	In Range			
Total Load Ave. MC % (wet basis)			17,1				
Total Test Load Weight (dry basis)					12,95 lb	5,87	kg
Kindling Moisture (%-dry basis)							
9	9	9	9,0	In Range	2,84 lb	1,29	kg
Start-up Fuel Moisture Readings (%-dry basis)							
20	20	20	20,0	In Range	3,75 lb	1,70	kg
Total Wt. All Fuel Added (dry basis)					19,55 lb	8,87	kg
Total Wt. All Fuel Burned (dry basis)					15,3 lb	7,0	kg

Load pieces Length in. 16 in.

Adjunct to ASTM E XXXX Wood Heater Cordwood Test Method - May 10, 2017 Version

Cordwood Fuel Load Calculators - 12 lb/ft^3 Nominal Load Density

Core 45-65% of Total Load Weight, Remainder 35-55% of Total Load Weight

Values to be input manually

For Usable Firebox Volumes up to 3.0 ft^3 - Low and Medium Fire

Nominal Required Load Density (wet basis)	12	lb/ft^3			
Usable Firebox Volume	1,57	ft^3			
Total Nom. Load Wt. Target	18,84	lb			
Total Load Wt. Allowable Range	17,90	to	19,78	lb	
Core Target Wt. Allowable Range	8,478	to	12,25	lb	
Remainder Load Wt. Allowable Range	6,59	to	10,36	lb	
					Mid-Point
Core Load Fuel Pc. Wt. Allowable Range	2,83	to	4,71	lb	3,77
Remainder Load Pc. Wt. Allowable Range	1,88	to	5,65	lb	3,77
	Pc. #				
Core Load Piece Wt. Actual	1	3,28	lb	In Range	
	2	3,46	lb	In Range	
	3	4,53	lb	In Range	
Core Load Total. Wt. Actual		11,27	lb	In Range	
	Pc. #				
Remainder Load Piece Wt.	1	4,47	lb	In Range	
(2 or 3 Pcs.)	2	2,97	lb	In Range	
	3		lb	NA	
Remainder Load Piece Weight Ratio - Small/Large		66%		In Range	≤ 67%
Remainder Load Tot. Wt. Act		7,44	lb	In Range	
Total Load Wt. Actual		18,71	lb	In Range	
Core % of Total Wt.		60%		In Range	45-65%
Remainder % of Total Wt.		40%		In Range	35-55%
Actual Load % of Nominal Target		99%		In Range	95-105%
Actual Fuel Load Density		11,9	lb/ft^3		
Allowable Charcoal Bed Wt. Range (lb)	1,9	to	3,7		Mid-Point
Actual Charcoal Bed Wt.		3,0	lb	In Range	2,8
Actual Fuel Load Ending Wt.		0,0	lb	Valid Test	≥ 90%
Total Wt. of Fuel Burned During Test Run lb.		18,7	lb		
Load pieces Length in.		16	in.		

Fuel Piece Moisture Reading (%-dry basis)

1	2	3	Ave.		Pc. Wt. Dry Basis			
25,1	21,6	20,3	22,3	In Range	2,68	lb	1,22	kg
24,6	21,3	22,6	22,8	In Range	2,82	lb	1,28	kg
23,1	21,9	21	22,0	In Range	3,71	lb	1,68	kg
27,6	23,3	21,4	24,1	In Range	3,60	lb	1,63	kg
23,5	21,1	21,6	22,1	In Range	2,43	lb	1,10	kg
			NA	NA	NA	lb	NA	kg

Total Load Ave. MC % (dry basis)	22,7	In Range			
Total Load Ave. MC % (wet basis)	18,5				
Total Test Load Weight (dry basis) →			15,25	lb	6,92 kg
Total Fuel Weight Burned During Test Run (dry basis)			15,2	lb	6,92 kg

For Usable Firebox Volumes above 3.0 ft^3 - Low and Medium Fire

Nominal Required Load Density (wet basis)	12	lb/ft^3			
Usable Firebox Volume		ft^3			
Total Nom. Load Wt. Target	0	lb			
Total Load Wt. Allowable Range	0,00	to	0,00	lb	
Core Target Wt. Allowable Range	0,00	to	0,00	lb	
Remainder Load Wt. Allowable Range	0,00	to	0,00	lb	
					Mid-Point
Core Load Fuel Pc. Wt. Allowable Range	0,00	to	0,00	lb	0,00
Remainder Load Pc. Wt. Allowable Range	0,00	to	0,00	lb	0,00
	Pc. #				
Core Load Piece Wt. Actual	1		lb	In Range	
	2		lb	In Range	
	3		lb	In Range	
Core Load Total. Wt. Actual		0,00	lb	In Range	
	Pc. #				
Remainder Load Piece Wt.	1		lb	In Range	
(3 or 4 Pcs.)	2		lb	In Range	
	3		lb	In Range	
	4		lb	NA	
Remainder Load Piece Weight Ratio - Small/Large		#NOMBRE!		#NOMBRE!	≤ 67%
Remainder Load Tot. Wt. Act		0,00	lb	In Range	
Total Load Wt. Actual		0,00	lb	In Range	
Core % of Total Wt.		#DIV/0!		#DIV/0!	45-65%
Remainder % of Total Wt.		#DIV/0!		#DIV/0!	35-55%
Actual Load % of Nominal Target		#DIV/0!		#DIV/0!	95-105%
Actual Fuel Load Density		#DIV/0!	lb/ft^3		
Allowable Charcoal Bed Wt. Range (lb)	0,1	to	-0,1		Mid-Point
Actual Charcoal Bed Wt.			lb	Out of Range	0,0
Actual Fuel Load Ending Wt.			lb	Valid Test	≥ 90%
Total Wt. of Fuel Burned During Test Run lb.		0,0	lb		

Fuel Piece Moisture Reading (%-dry basis)

1	2	3	Ave.		Pc. Wt. Dry Basis			
			#DIV/0!	#DIV/0!	#DIV/0!	lb	#DIV/0!	kg
			#DIV/0!	#DIV/0!	#DIV/0!	lb	#DIV/0!	kg
			#DIV/0!	#DIV/0!	#DIV/0!	lb	#DIV/0!	kg
			#DIV/0!	#DIV/0!	#DIV/0!	lb	#DIV/0!	kg
			#DIV/0!	#DIV/0!	#DIV/0!	lb	#DIV/0!	kg
			#DIV/0!	#DIV/0!	#DIV/0!	lb	#DIV/0!	kg
			NA	NA	NA	lb	NA	kg

Total Load Ave. MC % (dry basis)	#DIV/0!	#DIV/0!			
Total Load Ave. MC % (wet basis)	#DIV/0!				
Total Test Load Weight (dry basis) →			#DIV/0!	lb	#DIV/0! kg
Total Fuel Weight Burned During Test Run (dry basis)			#DIV/0!	lb	#DIV/0! kg

	Start	End
Barometer (kPa):	101,1	101,1
Barometer (in.Hg):	29,854819	29,85481876
Dry Bulb (F):	69,2	72,1
Humidity (%):	27,5	26,4
Air velocity (ft/min)	0	0

High fire test						
DGM #1	Final:	13517,581	cuft	Final:	382775,260	Liter
	Initial:	13499,417	cuft	Initial:	382260,910	Liter
DGM #2	Final:	5033,820	cuft	Final:	142541,900	Liter
	Initial:	5016,037	cuft	Initial:	142038,350	Liter
DGM room	Final:	8563,479	cuft	Final:	242490,730	Liter
	Initial:	8548,920	cuft	Initial:	242078,450	Liter

min or med burnrate						
DGM #1	Final:	13594,980	cuft	Final:	384966,950	Liter
	Initial:	13517,708	cuft	Initial:	382778,850	Liter
DGM #2	Final:	5110,008	cuft	Final:	144699,300	Liter
	Initial:	5034,013	cuft	Initial:	142547,380	Liter
DGM room	Final:	8635,434	cuft	Final:	244528,250	Liter
	Initial:	8563,479	cuft	Initial:	242490,730	Liter

Numéro de la ligne dans "Raw data" à partir duquel les données du test commence	30
Numéro de la ligne dans "Raw data" à partir duquel les données du highfire test commence	56
Numéro de la ligne dans "Raw data" à partir duquel les données du min ou medium fire test commence	148

Autres données à rentrer: dans preload data, load data, traverse et filter set weight

Project nu.	pi 20250
Date	2021-Feb-23
Technicien	m.m

Filter set weight highfire

	System 1 (g) 1st hour				System 1 (g)				System 2 (g)				Ambient blank (g)	Date	Heure
	probe	front / Back		gasket	probe	front / Back		gasket	probe	front / Back		gasket	Filter		
Number	5	21-22		15	7	23-24		29	33	25-26		37	27		
Before (1)															
Before (2)															
Before (3)															
Before (4)															
Before (5)	61,5024	0,1782		35,4043	61,4750	0,1777		34,3244	109,3632	0,1774		35,1854	0,0891	2021-02-22	17:00
Before (6)	61,5024	0,1782		35,4044	61,4749	0,1776		34,3245	109,3633	0,1775		35,1853	0,0890	2021-02-23	08:00
After (1)	61,5033	0,1806		35,4065	61,4754	0,1783		34,3266	109,3642	0,1787		35,1875	0,0891	2021-02-23	12:00
After (2)	61,5026	0,1803		35,4044	61,4751	0,1780		34,3246	109,3635	0,1798		35,1854	0,0891	2021-03-01	08:00
After (3)	61,5025	0,1803		35,4045	61,4749	0,1780		34,3246	109,3635	0,1799		35,1855	0,0891	2021-03-02	08:00
After (4)															
After (5)															
After (6)	61,5025	0,1803		35,4045	61,4749	0,1780		34,3246	109,3635	0,1799		35,1855	0,0891	2021-03-02	08:00
Difference	0,0001	0,0021	0,0000	0,0001	0,0000	0,0004	0,0000	0,0001	0,0002	0,0024	0,0000	0,0002	0,0001		
Total (mg)		2,3				2,8				2,8			0,1		
Total ajusté (mg)		**2,20**				**2,70**				**2,70**					

Project nu.	pi 20250
Date	2021-Feb-23
Technicien	mm

Filter set weight Low/ medium fire

	System 1 (g) 1st hour				System 1 (g)				System 2 (g)				Ambient blank (g)	Date	Heure
	probe	front / Back		gasket	probe	front / Back		gasket	probe	front / Back		gasket	Filter		
Number	17	428-429		8	30	430-431		12	36	432-433		18	434		
Before (1)															
Before (2)															
Before (3)															
Before (4)															
Before (5)	108,9482	0,1771		34,0653	110,2150	0,1772		34,3163	107,7233	0,1780		34,1391	0,0890	2021-02-22	17:00
Before (6)	108,9483	0,1771		34,0652	110,2151	0,1773		34,3164	107,7234	0,1781		34,1392	0,0890	2021-02-23	08:00
After (1)	108,9496	0,1783		34,0672	110,2158	0,1782		34,3180	107,7243	0,1805		34,1406	0,0893	2021-02-23	20:00
After (2)	108,9484	0,1778		34,0653	110,2153	0,1779		34,3165	107,7237	0,1795		34,1394	0,0890	2021-03-01	08:00
After (3)	108,9484	0,1778		34,0653	110,2153	0,1779		34,3166	107,7236	0,1795		34,1394	0,0890	2021-03-02	08:00
After (4)															
After (5)															
After (6)	108,9484	0,1778		34,0653	110,2153	0,1779		34,3166	107,7236	0,1795		34,1394	0,0890	2021-03-02	08:00
Difference	0,0001	0,0007	0,0000	0,0001	0,0002	0,0006	0,0000	0,0002	0,0002	0,0014	0,0000	0,0002	0,0000		
Total (mg)		0,9				1,9				1,8			0		
Total ajusté (mg)		**0,90**				**1,90**				**1,80**					

Project nu.	pi 20250
Date	2021-Feb-23
Technicien	mm

SFBA EPA EMISSION RESULTS

Test Duration: **96** min

PRESSURE FACTOR:	DGM 1	0,96232	
	DGM 2	0,96764	
	DGM 3	0,99782	
TEMPERATURE FACTORS	DGM 1	0,99642	
	DGM 2	0,99084	
	DGM 3	0,99676	
VOLUMES SAMPLED	DGM 1	17,451	SCft
	DGM 2	17,073	Scft
	DGM 3	14,335	SCft
TOTAL TUNNEL VOLUME :		31627	

SAMPLE RATIOS

Sample Train 1:	1812,318
Sample Train 2:	1852,460

Paticulate concentration

Sample Train 1	**0,000160**	g/dscf
Sample Train 2	**0,000164**	g/dscf
Room	**0,000007**	g/dscf

TOTAL EMISSIONS

Sample Train 1	**4,85**	g
Sample Train 2	**4,97**	g

EMISSION RATES

Sample Train 1	**3,03**	g/hr
Sample Train 2	**3,10**	g/hr
1st hour emission rate	**4,17**	g/hr

	Train 1	Train 2
Cs	0,0001604	0,000164

RESULTS

Average emission rate: 3,1 g/hr

Burn Rate : 4,452 Dry kg/hr

BAROMETRIC PRESSURE

Average:	29,85481876	in Hg
Start:	29,85481876	in Hg
End:	29,85481876	in Hg

DGM CONTROLLER VALUES

DGM 1	Final:	13517,581	Cuft
	Initial:	13499,417	Cuft
DGM 2	Final:	5033,820	Cuft
	Initial:	5016,037	Cuft
DGM #3	Final:	8563,479	Cuft
	Initial:	8548,920	Cuft

TEMPERATURES

DGM 1	529,897	°R
DGM 2	532,880	°R

CALIBRATION FACTORS

DGM 1	1,0019
DGM 2	1,0014
DGM #3	0,9900

TUNNEL FLOW RATE: 329,445 Dscfm

PARTICULATE CATCH

Total Sample Train 1:	2,80	mg
Total Sample Train 2:	2,80	mg
Total Sample Train 1 1st hour:	2,30	mg

DEVIATION: 1,14%

*		*	*	*	*1	*2	*3	*4	*5	*6	*7	*8	Mass flow 1	DGM 1	DGM 1	Filter 1	Mass flow 2	DGM 2	DGM 2	Filter 2	Tunnel Velo	Flue draft
Elapsed		Weight			Flue	Room	Tunnel	Unit	Unit	Unit	Unit	Unit	Reading	Inlet T	Outlet T	Temp	Reading	Inlet T	Outlet T	Temp	Pressure	Pressure
Time	Raw data row	Remaining	CO	CO_2	Gas	Temp	Dry Bulb	Top	Back	R.Side	L.Side	Bottom										
min		lbs	%	%	°F	°F	°F	°F	°F	°F	°F	°F	cuft/min	oF	oF	oF	cuft/min	oF	oF	oF	in wc	in wc
0,00	30,00	7,6	0,0	0,0	71,7	66,1	68,0	67,7	67,8	67,4	67,2	68,2	0,18	66,56	66,93	81,00	0,18	66,91	69,64	81,82	0,07	0,01
1,0	31,0	7,6	0,0	1,1	127,4	66,1	73,0	71,0	67,9	67,4	67,2	68,2	0,18	66,60	66,95	82,49	0,18	66,86	69,72	82,48	0,08	0,03
2,0	32,0	7,4	0,0	6,5	195,9	66,0	74,5	90,4	69,0	67,4	67,2	68,2	0,18	66,57	66,95	84,54	0,18	66,78	69,82	83,80	0,07	0,04
3,0	33,0	7,3	0,1	19,3	206,0	66,0	72,3	110,4	70,1	67,4	67,3	68,2	0,18	66,52	66,93	85,32	0,18	66,73	69,88	84,48	0,07	0,04
4,0	34,0	7,3	0,1	21,6	214,5	66,1	72,7	122,5	71,3	67,5	67,3	68,2	0,18	66,58	66,93	84,29	0,18	66,77	69,97	84,72	0,08	0,04
5,0	35,0	7,2	0,1	21,4	241,6	66,2	74,2	135,4	72,9	67,5	67,4	68,2	0,18	66,54	66,93	82,89	0,18	66,75	70,03	85,06	0,08	0,05
6,0	36,0	7,1	0,1	5,0	289,9	66,1	77,1	156,1	75,1	67,6	67,7	68,3	0,18	66,49	66,93	81,64	0,18	66,72	70,11	85,21	0,07	0,06
7,0	37,0	6,9	0,2	6,2	377,5	66,0	82,5	194,1	78,2	67,8	68,0	68,4	0,18	66,50	66,93	82,32	0,18	66,69	70,20	85,68	0,07	0,07
8,0	38,0	6,7	0,2	8,7	427,1	66,1	85,9	244,6	82,9	68,1	68,5	68,6	0,18	66,53	66,90	84,75	0,18	66,68	70,25	86,07	0,07	0,07
9,0	39,0	6,5	0,2	9,0	453,5	66,4	88,8	283,2	88,6	68,5	69,3	69,0	0,18	66,59	66,92	85,65	0,18	66,72	70,33	85,76	0,07	0,08
10,0	40,0	6,3	0,2	9,4	488,4	66,5	91,8	322,3	95,7	69,0	70,3	69,5	0,18	66,59	66,92	84,73	0,18	66,73	70,45	85,49	0,07	0,08
11,0	41,0	6,1	0,1	10,0	523,0	66,7	95,8	363,3	103,6	69,8	71,6	70,1	0,18	66,63	66,95	83,82	0,18	66,77	70,55	85,33	0,07	0,09
12,0	42,0	5,9	0,1	10,9	524,7	66,7	96,8	393,8	111,2	70,8	73,3	71,1	0,18	66,68	66,95	83,04	0,18	66,78	70,67	85,17	0,07	0,09
13,0	43,0	5,6	0,1	10,0	565,4	66,5	101,2	426,2	119,0	72,0	75,4	72,4	0,18	66,71	66,96	82,42	0,18	66,82	70,77	85,04	0,07	0,09
14,0	44,0	5,3	0,2	11,5	593,3	66,7	102,8	474,0	126,7	73,6	77,9	74,2	0,18	66,74	67,00	81,99	0,18	66,85	70,88	85,00	0,07	0,09
15,0	45,0	5,1	0,2	11,2	593,9	67,0	104,0	506,9	134,7	75,5	80,8	76,6	0,18	66,72	66,98	81,56	0,18	66,80	70,99	84,84	0,07	0,09
16,0	46,0	4,9	0,2	11,4	640,3	67,2	108,9	540,0	143,4	77,8	84,2	79,7	0,18	66,78	67,00	82,54	0,18	66,87	71,02	84,83	0,07	0,10
17,0	47,0	4,5	0,4	13,1	689,2	67,3	114,4	578,2	153,4	80,5	88,0	83,4	0,18	66,98	67,06	86,44	0,18	67,06	71,04	85,04	0,07	0,10
18,0	48,0	4,2	0,2	14,6	710,0	67,8	118,5	613,9	164,3	83,6	92,4	87,6	0,18	67,12	67,10	86,82	0,18	67,20	71,15	85,35	0,07	0,10
19,0	49,0	4,0	0,8	14,4	701,6	68,2	120,4	640,0	176,0	87,1	97,3	92,4	0,18	67,33	67,15	86,53	0,18	67,44	71,27	85,89	0,07	0,10
20,0	50,0	3,8	0,5	13,5	671,8	68,1	119,3	653,6	188,1	91,1	102,7	97,6	0,18	67,56	67,27	86,21	0,18	67,76	71,38	85,65	0,07	0,10
21,0	51,0	3,5	0,4	12,3	648,7	68,5	118,4	654,2	200,5	95,5	108,6	103,2	0,18	67,79	67,39	85,88	0,18	68,13	71,48	85,60	0,07	0,10
22,0	52,0	3,3	0,3	11,6	626,4	68,7	118,1	648,5	213,0	100,2	114,9	109,4	0,18	68,00	67,48	85,60	0,18	68,35	71,61	85,55	0,07	0,09
23,0	53,0	3,2	0,4	10,8	621,1	68,6	118,2	643,9	225,4	105,5	121,4	116,1	0,18	68,21	67,60	85,40	0,18	68,64	71,76	85,48	0,07	0,09
24,0	54,0	3,0	0,3	10,9	613,9	68,8	118,6	641,7	237,9	111,0	128,2	123,3	0,18	68,37	67,71	85,28	0,18	68,93	71,90	85,52	0,07	0,09
25,0	55,0	2,8	0,3	10,5	613,1	69,0	118,4	642,2	249,5	116,9	134,9	130,9	0,18	68,53	67,84	85,19	0,18	69,16	72,01	85,55	0,07	0,09
26,0	56,0	18,2	0,3	10,7	651,7	69,2	148,5	639,1	262,2	123,0	141,7	139,2	0,18	68,75	68,06	86,04	0,18	69,55	72,15	86,99	0,06	0,09
27,0	57,0	17,9	0,2	6,6	633,5	69,3	139,3	644,3	271,2	129,3	148,5	148,2	0,18	69,14	68,23	87,26	0,18	69,85	72,24	88,80	0,07	0,10
28,0	58,0	17,6	0,3	11,6	666,9	69,6	130,2	665,3	270,2	135,5	155,1	157,3	0,18	69,21	68,41	86,72	0,18	70,02	72,34	87,86	0,07	0,10
29,0	59,0	17,4	0,2	12,8	675,6	69,3	128,5	686,4	266,3	141,8	161,5	166,3	0,18	69,26	68,52	86,56	0,18	70,18	72,42	87,49	0,07	0,10
30,0	60,0	17,1	0,2	12,9	693,3	69,2	128,8	707,3	261,9	148,0	167,7	175,0	0,18	69,42	68,73	86,49	0,18	70,61	72,55	87,45	0,07	0,10
31,0	61,0	16,8	0,2	13,5	716,7	69,8	130,7	726,3	257,6	154,1	173,8	183,2	0,18	69,50	68,85	86,59	0,18	70,73	72,66	87,60	0,07	0,10
32,0	62,0	16,5	0,3	14,3	736,8	69,8	131,8	746,7	253,9	160,1	179,8	191,0	0,18	69,60	68,96	86,73	0,18	70,93	72,85	87,75	0,07	0,11
33,0	63,0	16,2	0,4	14,8	749,6	69,8	133,0	764,7	251,5	166,0	185,8	198,4	0,18	69,74	69,07	86,90	0,18	71,07	73,03	87,95	0,07	0,11
34,0	64,0	15,9	0,4	14,9	742,6	70,4	132,5	776,1	250,1	171,8	192,2	205,7	0,18	69,82	69,18	87,10	0,18	71,15	73,14	88,15	0,07	0,11
35,0	65,0	15,6	0,3	14,3	728,3	70,4	131,7	779,4	249,4	177,8	198,5	212,8	0,18	69,81	69,36	87,13	0,18	71,17	73,23	88,27	0,07	0,10
36,0	66,0	15,3	0,3	13,6	717,1	70,1	130,6	779,9	249,6	183,9	204,9	219,9	0,18	69,95	69,56	87,01	0,18	71,49	73,34	88,24	0,07	0,10
37,0	67,0	15,1	0,2	13,2	712,0	70,1	130,7	779,5	249,9	189,8	211,3	226,9	0,18	70,01	69,63	87,03	0,18	71,57	73,50	88,34	0,07	0,10
38,0	68,0	14,8	0,2	13,1	705,8	70,1	130,1	777,8	250,5	195,6	217,7	234,0	0,18	70,00	69,71	87,04	0,18	71,57	73,54	88,41	0,07	0,10
39,0	69,0	14,6	0,2	12,8	700,5	69,9	129,9	778,2	251,4	201,5	223,9	241,2	0,18	70,03	69,76	87,09	0,18	71,62	73,58	88,45	0,07	0,10
40,0	70,0	14,3	0,2	12,7	695,2	70,2	129,3	776,3	252,5	207,3	230,3	248,4	0,18	70,10	69,77	87,11	0,18	71,66	73,66	88,49	0,07	0,10
41,0	71,0	14,1	0,2	12,5	701,1	70,2	129,6	776,9	254,3	213,1	236,3	255,6	0,18	70,15	69,80	87,25	0,18	71,79	73,81	88,59	0,07	0,11
42,0	72,0	13,8	0,3	13,0	712,4	70,3	130,4	779,9	256,6	218,8	242,3	262,8	0,18	70,21	69,90	87,39	0,18	71,87	73,91	88,68	0,07	0,11
43,0	73,0	13,5	0,3	13,3	718,5	70,6	131,1	784,2	258,9	224,4	248,2	269,9	0,18	70,26	69,98	87,54	0,18	71,88	73,99	88,88	0,07	0,10
44,0	74,0	13,2	0,3	13,4	721,9	70,4	131,4	789,1	261,5	230,0	254,0	277,0	0,18	70,30	70,04	87,62	0,18	71,99	74,11	88,98	0,07	0,11
45,0	75,0	13,0	0,4	13,4	735,4	70,2	132,9	796,0	264,3	235,5	259,6	284,0	0,18	70,38	70,07	87,72	0,18	72,03	74,18	89,14	0,07	0,11
46,0	76,0	12,7	0,5	13,8	751,6	70,6	134,2	804,5	267,4	240,8	265,1	291,0	0,18	70,46	70,10	87,89	0,18	72,11	74,33	89,38	0,07	0,11
47,0	77,0	12,4	0,5	14,2	759,3	70,3	135,8	814,8	271,0	246,4	270,5	298,0	0,18	70,55	70,23	88,11	0,18	72,28	74,45	89,58	0,07	0,11
48,0	78,0	12,1	0,5	14,4	757,9	70,6	134,3	822,0	274,7	251,9	275,7	304,9	0,18	70,63	70,41	88,16	0,18	72,43	74,56	89,76	0,07	0,11
49,0	79,0	11,8	0,5	14,2	752,7	70,7	133,9	826,3	278,6	257,5	280,9	311,9	0,18	70,72	70,44	88,27	0,18	72,53	74,70	89,17	0,07	0,11
50,0	80,0	11,5	0,5	13,8	747,7	70,9	134,2	828,3	283,1	263,3	286,1	319,0	0,18	70,83	70,54	88,36	0,18	72,71	74,83	88,81	0,07	0,11
51,0	81,0	11,3	0,4	13,7	743,4	71,2	132,5	829,0	287,8	268,9	290,7	326,1	0,18	70,84	70,54	88,37	0,18	72,71	74,95	88,50	0,07	0,11
52,0	82,0	11,0	0,4	13,4	738,0	70,6	131,9	828,6	292,3	274,2	295,4	333,2	0,18	70,86	70,63	88,45	0,18	72,72	75,08	88,32	0,07	0,11
53,0	83,0	10,8	0,4	13,2	731,8	70,8	132,1	827,4	297,1	279,7	299,9	340,4	0,18	70,87	70,63	88,51	0,18	72,75	75,24	88,29	0,07	0,11
54,0	84,0	10,5	0,4	13,0	731,2	70,4	132,2	824,1	301,8	285,2	304,3	347,8	0,18	70,93	70,66	88,62	0,18	72,85	75,36	88,71	0,07	0,11
55,0	85,0	10,3	0,4	13,1	727,2	70,6	132,4	823,3	306,3	290,4	308,4	355,2	0,18	70,96	70,70	88,69	0,18	72,90	75,45	88,96	0,07	0,11
56,0	86,0	10,0	0,4	13,0	722,6	70,6	131,5	822,2	311,0	295,7	312,5	362,7	0,18	70,97	70,72	88,75	0,18	72,92	75,48	88,85	0,07	0,11
57,0	87,0	9,8	0,4	12,8	717,8	70,6	131,5	819,3	315,5	300,7	316,4	370,3	0,18	71,00	70,74	88,78	0,18	72,96	75,55	88,98	0,07	0,11
58,0	88,0	9,6	0,4	12,7	710,2	70,9	130,1	815,7	319,8	305,6	320,1	378,1	0,18	71,05	70,81	88,77	0,18	73,04	75,67	88,99	0,07	0,11
59,0	89,0	9,4	0,3	12,3	700,3	71,0	128,9	810,9	324,1	310,5	323,6	385,8	0,18	71,14	70,86	88,77	0,18	73,16	75,76	89,01	0,07	0,11
60,0	90,0	9,2	0,3	11,8	693,5	70,6	128,6	804,5	328,3	315,1	326,9	393,8	0,18	71,15	70,88	80,32	0,18	73,14	75,96	88,95	0,07	0,11
61,0	91,0	9,0	0,3	11,6	688,9	70,9	126,7	800,3	332,5	319,4	330,2	401,9	0,18	71,14	70,87	80,89	0,18	73,12	76,08	88,84	0,07	0,11
62,0	92,0	8,7	0,2	11,5	684,2	70,9	125,2	795,8	336,7	323,5	332,9	410,1	0,18	71,15	70,90	85,67	0,18	73,13	76,20	88,70	0,07	0,10
63,0	93,0	8,6	0,2	11,5	682,0	71,1	125,8	790,3	341,3	327,3	335,8	418,4	0,18	71,19	70,93	86,64	0,18	73,21	76,33	88,69	0,07	0,10
64,0	94,0	8,4	0,2	11,4	677,0	71,0	124,8	787,2	346,5	331,1	338,2	426,9	0,18	71,24	71,00	86,52	0,18	73,30	76,36	88,70	0,07	0,10
65,0	95,0	8,2	0,2	11,2	669,6	71,0	123,2	782,1	351,7	334,3	340,6	435,5	0,18	71,31	71,11	86,11	0,18	73,46	76,44	88,55	0,07	0,10
66,0	96,0	8,1	0,2	10,9	664,2	70,4	123,4	775,5	356,9	337,2	342,8	444,1	0,18	71,35	71,18	85,74	0,18	73,43	76,54	88,51	0,07	0,10
67,0	97,0	7,9	0,2	10,8	668,6	71,3	122,9	773,1	361,7	339,9	344,9	452,7	0,18	71,39	71,25	85,38	0,18	73,47	76,61	88,57	0,07	0,10
68,0	98,0	7,7	0,1	11,3	677,9	71,0	123,6	774,7	366,6	342,4	346,7	461,3	0,18	71,45	71,31	85,10	0,18	73,51	76,69	88,62	0,07	0,10
69,0	99,0	7,5	0,2	11,9	687,9	71,2	125,1	778,8	371,4	344,8	348,6	470,0	0,18	71,49	71,41	84,86	0,18	73,55	76,68	88,71	0,07	0,10
70,0	100,0	7,3	0,2	12,3	694,1	71,0	124,6	785,0	376,6	347,0	350,4	478,7	0,18	71,53	71,47	84,65	0,18	73,59	76,74	88,78	0,07	0,10
71,0	101,0	7,1	0,2	12,4	693,9	71,2	123,7	788,9	381,8	348,9	352,1	487,6	0,18	71,59	71,48	84,49	0,18	73,71	76,82	88,75	0,07	0,11
72,0	102,0	7,0	0,2	12,2	691,7	71,4	124,6	792,2	386,2	350,7	354,3	496,6	0,18	71,69	71,55	84,33	0,18	73,90	76,93	88,71	0,07	0,10
73,0	103,0	6,7	0,2	12,1	688,9	71,0	124,7	794,7	390,7	353,0	356,3	505,8	0,18	71,76	71,70	84,20	0,18	73,99	76,97	88,74	0,07	0,10
74,0	104,0	6,6	0,2	12,0	684,6	70,8	124,2	794,3	395,3	354,8	358,5	515,1	0,18	71,75	71,72	84,10	0,18	73,93	77,08	88,80	0,07	0,10
75,0	105,0	6,4	0,1	11,8	676,0	71,2	123,7	790,3	399,8	356,7	360,6	524,6	0,18	71,77	71,87	84,02	0,18	74,00	77,18	88,79	0,07	0,10
76,0	106,0	6,3	0,1	11,5	669,5	71,5	122,6	785,0	404,3	358,3	363,0	534,6	0,18	71,84	71,91	83,93	0,18	74,06	77,28	88,74	0,07	0,10
77,0	107,0	6,1	0,1	11,2	662,2	71,2	121,8	780,7	408,7	360,2	365,0	544,8	0,18	71,94	72,03	83,87	0,18	74,11	77,34	88,99	0,07	0,10
78,0	108,0	6,0	0,1	10,9	656,0	71,0	119,9	774,5	413,5	361,7	367,0	555,1	0,18	71,90	72,01	83,81	0,18	74,10	77,40	88,93	0,07	0,10
79,0	109,0	5,8	0,1	10,7	651,0	71,3	121,0	769,1	418,4	363,2	369,1	565,8	0,18	71,88	71,99	83,78	0,18	74,10	77,48	88,83	0,07	0,10
80,0	110,0	5,7	0,1	10,7	644,8	71,4	119,0	764,0	423,4	364,6	370,9	576,3	0,18	71,98	72,14	83,74	0,18	74,26	77,56	88,72	0,07	0,10
81,0	111,0	5,5	0,0	10,4	632,5	71,4	118,1	754,1	428,9	366,0	372,4	587,6	0,18	72,05	72,21	83,66	0,18	74,30	77,60	88,54	0,07	0,10
82,0	112,0	5,5	0,0	9,3	621,1	71,4	118,3	742,1	434,4	366,9	373,8	598,2	0,18	72,10	72,23	83,62	0,18	74,32	77,66	88,22	0,07	0,10
83,0	113,0	5,3	0,0	8,8	610,4	71,4	116,5	728,9	439,5	367,5	375,2	608,4	0,18	72,09	72,23	83,59	0,18	74,27	77,76	88,15	0,07	0,10
84,0	114,0	5,2	0,0	8,4	600,7	70,8	115,7	717,5	444,7	368,0	376,2	617,7	0,18	72,12	72,23	83,52	0,18	74,23	77,78	88,28	0,07	0,09
85,0	115,0	5,1	0,1	8,2	592,4	71,4	114,8	705,6	449,7	368,2	376,9	626,1	0,18	72,10	72,22	83,47	0,18	74,23	77,85	87,89	0,07	0,09
86,0	116,0	5,0	0,1	8,2	587,1	71,6	113,5	696,3	454,7	368,0	377,2	633,6	0,18	72,11	72,24	83,39	0,18	74,21	77,90	88,00	0,07	0,09
87,0	117,0	4,9	0,1	8,3	585,0	70,9	113,6	688,3	459,3	367,7	377,5	640,2	0,18	72,03	72,23	83,34	0,18	74,16	77,91	87,72	0,07	0,10
88,0	118,0	4,9	0,1	8,4	580,8	71,2	113,1	680,8	463,7	367,3	377,2	646,3	0,18	72,00	72,26	83,31	0,18	74,19	77,97	87,59	0,07	0,09

89,0	119,0	4,8	0,1	8,3	579,7	71,0	113,0	677,4	467,4	366,5	376,9	652,0	0,18	71,97	72,25	83,23	0,18	74,20	78,00	87,45	0,07	0,09
90,0	120,0	4,7	0,1	7,9	572,4	70,9	113,0	672,9	469,9	365,8	376,3	657,5	0,18	71,92	72,25	83,20	0,18	74,19	78,08	87,62	0,07	0,09
91,0	121,0	4,6	0,2	7,7	563,8	70,9	112,3	665,3	472,5	365,2	375,3	662,5	0,18	71,90	72,24	83,16	0,18	74,19	78,15	87,29	0,07	0,09
92,0	122,0	4,5	0,2	7,4	555,5	71,4	110,8	656,2	475,4	364,3	374,2	667,4	0,18	71,89	72,26	83,07	0,18	74,15	78,23	87,21	0,07	0,09
93,0	123,0	4,5	0,3	7,2	547,5	70,9	109,9	646,5	477,9	363,6	373,1	671,9	0,18	71,93	72,32	82,95	0,18	74,25	78,30	86,94	0,07	0,09
94,0	124,0	4,4	0,4	7,0	541,3	71,1	108,2	637,5	479,8	362,8	371,4	676,3	0,18	71,99	72,47	82,85	0,18	74,35	78,32	86,78	0,07	0,09
95,0	125,0	4,3	0,4	7,0	536,3	71,0	108,3	629,0	482,0	361,9	369,7	680,6	0,18	71,93	72,58	82,76	0,18	74,27	78,26	86,46	0,07	0,09
96,0	126,0	4,2	0,3	6,9	533,7	70,7	108,2	622,7	484,1	361,1	367,7	684,9	0,18	71,88	72,55	82,66	0,18	74,22	78,25	86,52	0,07	0,09

SFBA EPA EMISSION RESULTS

Test Duration: **405** min

PRESSURE FACTOR:	DGM 1	0,96955	
	DGM 2	0,94759	
	DGM 3	0,99782	
TEMPERATURE FACTORS	DGM 1	0,99186	
	DGM 2	0,98486	
	DGM 3	0,99524	
VOLUMES SAMPLED	DGM 1	74,454	SCft
	DGM 2	71,018	Scft
	DGM 3	70,737	SCft
TOTAL TUNNEL VOLUME :		141328	

SAMPLE RATIOS

Sample Train 1:	1898,204
Sample Train 2:	1990,044

Paticulate concentration

Sample Train 1	**0,000026**	g/dscf
Sample Train 2	**0,000025**	g/dscf
Room	**0,000000**	g/dscf

TOTAL EMISSIONS

Sample Train 1	**3,61**	g
Sample Train 2	**3,58**	g

EMISSION RATES

Sample Train 1	**0,53**	g/hr
Sample Train 2	**0,53**	g/hr
1st hour emission rate	**1,71**	g/hr

	Train 1	Train 2
Cs	2,552E-05	2,5346E-05

RESULTS

Average emission rate: 0,53 g/hr

Burn Rate : 1,025 Dry kg/hr

BAROMETRIC PRESSURE

Average:	29,85481876	in Hg
Start:	29,85481876	in Hg
End:	29,85481876	in Hg

DGM CONTROLLER VALUES

DGM 1	Final:	13594,980	Cuft
	Initial:	13517,708	Cuft
DGM 2	Final:	5110,008	Cuft
	Initial:	5034,013	Cuft
DGM #3	Final:	8635,434	Cuft
	Initial:	8563,479	Cuft

TEMPERATURES

DGM 1	532,333	°R
DGM 2	536,119	°R

CALIBRATION FACTORS

DGM 1	1,0019
DGM 2	1,0014
DGM #3	0,9900

TUNNEL FLOW RATE: 348,959 Dscfm

PARTICULATE CATCH

Total Sample Train 1:	1,90	mg
Total Sample Train 2:	1,80	mg
Total Sample Train 1 1st hour:	0,90	mg

DEVIATION: 0,34%

		Average	0,48	5,17	291,67	70,53	85,21	411,72	381,05	226,55	222,70	567,13	0,18	71,53	73,14	83,84	0,18	74,08	78,16	84,83	0,07	0,05
*		*	*	*	*1	*2	*3	*4	*5	*6	*7	*8	Mass flow 1	DGM 1	DGM 1	Filter 1	Mass flow 2	DGM 2	DGM 2	Filter 2	Tunnel Velo	Flue draft
Elapsed		Weight			Flue	Room	Tunnel	Unit	Unit	Unit	Unit	Unit	Reading	Inlet T	Outlet T	Temp	Reading	Inlet T	Outlet T	Temp	Pressure	Pressure
Time	Raw data row	Remaining	CO	CO_2	Gas	Temp	Dry Bulb	Top	Back	R.Side	L.Side	Bottom									in wc	in wc
min		lbs	%	%	°F	°F	°F	°F	°F	°F	°F	°F	cuft/min	oF	oF	oF	cuft/min	oF	oF	oF	in wc	in wc
0,00	148,00	18,7	0,3	1,2	412,8	71,5	150,0	533,1	534,8	331,1	327,5	776,6	0,18	71,65	72,67	84,26	0,18	72,86	76,71	84,05	0,07	0,07
1,0	149,0	18,3	0,1	2,0	501,4	70,8	112,6	532,8	524,5	329,4	326,5	783,5	0,18	72,10	72,60	83,67	0,18	72,85	76,99	83,73	0,07	0,09
2,0	150,0	18,1	0,5	7,3	565,0	71,0	112,7	557,6	509,7	327,1	325,3	788,1	0,18	72,01	72,54	83,09	0,18	72,77	77,26	83,39	0,07	0,10
3,0	151,0	17,8	0,3	9,7	628,2	70,9	116,0	593,7	494,9	325,1	324,4	791,3	0,18	72,19	72,51	82,58	0,18	72,94	77,45	83,15	0,07	0,10
4,0	152,0	17,5	0,1	13,0	678,2	71,2	118,4	639,3	480,9	323,0	323,7	793,6	0,18	72,35	72,54	82,17	0,18	73,08	77,60	83,00	0,07	0,10
5,0	153,0	17,2	0,2	14,5	705,4	71,1	121,6	684,6	468,5	321,3	323,2	795,2	0,18	72,50	72,54	81,79	0,18	73,23	77,71	82,83	0,07	0,11
6,0	154,0	17,0	0,3	15,1	658,8	70,9	115,2	715,6	457,6	320,0	324,1	796,2	0,18	72,42	72,53	81,47	0,18	73,29	77,83	82,62	0,07	0,10
7,0	155,0	16,7	0,2	13,8	641,0	70,9	114,3	728,8	447,7	318,8	325,1	796,0	0,18	72,27	72,61	81,22	0,18	73,45	77,87	82,46	0,07	0,10
8,0	156,0	16,5	0,1	13,2	633,6	71,1	114,1	734,6	438,5	318,0	327,0	794,7	0,18	72,23	72,74	81,12	0,18	73,69	77,97	84,37	0,07	0,10
9,0	157,0	16,2	0,1	13,0	632,0	70,5	113,6	738,7	429,9	317,6	328,9	792,5	0,18	72,17	72,82	83,42	0,18	73,77	78,02	86,56	0,07	0,10
10,0	158,0	16,0	0,1	12,9	630,4	70,8	114,3	741,4	422,0	317,4	331,3	789,8	0,18	72,14	72,81	85,90	0,18	73,79	78,04	86,97	0,07	0,10
11,0	159,0	15,9	0,1	12,8	573,3	71,3	105,3	746,4	415,3	317,1	333,8	786,9	0,18	72,14	72,81	86,29	0,18	73,86	78,04	86,72	0,08	0,10
12,0	160,0	15,7	0,2	11,8	530,4	71,5	102,5	736,2	409,0	317,5	336,4	783,2	0,18	72,10	72,93	85,85	0,18	73,87	78,05	86,41	0,07	0,09
13,0	161,0	15,6	0,4	9,2	505,1	71,5	101,4	723,8	403,7	317,7	338,5	779,5	0,18	72,11	72,96	85,25	0,18	73,90	77,99	86,11	0,07	0,09
14,0	162,0	15,5	0,5	8,4	489,6	71,1	100,7	708,5	398,5	317,6	340,6	775,6	0,18	72,13	72,93	84,70	0,18	73,89	77,95	85,80	0,08	0,09
15,0	163,0	15,3	0,5	8,1	478,0	71,1	100,8	695,5	393,7	317,4	342,3	771,7	0,18	72,17	72,90	84,23	0,18	74,00	77,99	85,48	0,07	0,09
16,0	164,0	15,2	0,5	8,1	470,0	71,5	98,8	684,5	389,4	317,2	343,3	767,7	0,18	72,16	72,91	83,79	0,18	73,99	78,01	85,16	0,08	0,09
17,0	165,0	15,1	0,5	8,1	465,8	71,4	98,3	676,7	385,3	316,4	343,9	763,7	0,18	72,12	72,92	83,36	0,18	74,05	78,02	84,83	0,07	0,09
18,0	166,0	15,0	0,4	8,2	460,9	71,0	98,6	671,6	381,4	315,6	344,2	759,6	0,18	72,08	72,90	83,00	0,18	73,99	78,01	84,54	0,07	0,09
19,0	167,0	14,8	0,4	8,3	456,0	71,4	97,4	665,6	377,6	314,5	343,9	755,5	0,18	72,01	72,90	82,64	0,18	73,92	77,97	84,27	0,08	0,08
20,0	168,0	14,7	0,5	8,1	451,4	71,2	97,3	661,3	374,3	313,2	343,1	751,4	0,18	72,01	72,89	82,29	0,18	73,88	77,91	84,01	0,08	0,09
21,0	169,0	14,6	0,5	8,0	446,7	70,8	97,7	657,1	371,3	311,9	342,1	747,2	0,18	72,01	72,87	81,99	0,18	73,92	77,94	83,76	0,07	0,08
22,0	170,0	14,5	0,5	7,8	441,6	71,1	97,1	650,8	368,2	310,4	340,9	743,0	0,18	72,01	72,87	81,74	0,18	73,89	77,93	83,51	0,07	0,09
23,0	171,0	14,4	0,6	7,6	438,6	71,0	96,1	647,2	365,4	308,7	339,4	738,9	0,18	72,01	72,96	81,50	0,18	73,91	77,88	83,26	0,07	0,08
24,0	172,0	14,2	0,5	7,5	433,1	71,0	95,2	639,9	362,7	307,1	337,7	734,7	0,18	72,05	73,16	81,58	0,18	74,06	77,84	83,00	0,07	0,08
25,0	173,0	14,1	0,5	7,5	429,1	71,3	95,2	632,8	360,2	305,5	335,7	730,5	0,18	72,01	73,13	84,17	0,18	73,98	77,82	82,75	0,07	0,08
26,0	174,0	14,0	0,4	7,5	424,6	71,0	94,9	624,1	357,8	303,7	333,6	726,5	0,18	71,97	73,08	86,12	0,18	73,94	77,94	84,27	0,08	0,08
27,0	175,0	13,9	0,4	7,4	420,4	71,0	95,2	617,5	355,5	301,8	331,5	722,4	0,18	71,91	73,02	86,10	0,18	73,97	78,06	86,39	0,08	0,08
28,0	176,0	13,8	0,4	7,3	417,4	71,1	94,6	612,2	353,4	300,1	329,5	718,3	0,18	71,86	72,95	85,55	0,18	73,96	78,15	86,94	0,08	0,08
29,0	177,0	13,7	0,4	7,3	414,0	71,0	95,4	607,6	351,3	298,5	327,2	714,4	0,18	71,80	72,92	84,97	0,18	73,91	78,22	86,71	0,07	0,08
30,0	178,0	13,6	0,4	7,2	411,3	70,8	94,5	603,3	349,1	296,7	325,1	710,4	0,18	71,81	72,90	84,45	0,18	73,87	78,25	86,38	0,07	0,08
31,0	179,0	13,5	0,4	7,2	409,2	70,7	94,7	598,8	347,2	295,1	322,9	706,5	0,18	71,80	72,89	83,97	0,18	73,95	78,26	85,99	0,07	0,08
32,0	180,0	13,4	0,4	7,1	406,0	70,8	94,8	594,7	345,2	293,4	320,9	702,7	0,18	71,72	72,84	83,51	0,18	73,92	78,33	85,62	0,07	0,08
33,0	181,0	13,3	0,4	7,1	403,4	70,7	94,4	591,5	343,3	291,6	318,9	698,9	0,18	71,65	72,84	83,11	0,18	73,89	78,36	85,23	0,08	0,08
34,0	182,0	13,2	0,4	7,1	403,1	70,6	94,1	587,2	341,5	289,9	316,9	695,3	0,18	71,62	72,80	82,73	0,18	73,88	78,44	84,85	0,08	0,08
35,0	183,0	13,0	0,4	7,1	401,7	70,7	94,1	585,5	339,7	288,2	314,9	691,6	0,18	71,58	72,79	82,35	0,18	73,91	78,48	84,50	0,08	0,08
36,0	184,0	13,0	0,4	7,1	401,5	70,8	93,9	583,6	337,9	286,4	312,9	688,0	0,18	71,57	72,80	82,02	0,18	73,93	78,51	84,15	0,07	0,08
37,0	185,0	12,8	0,4	7,2	401,5	70,8	94,1	582,5	336,2	284,5	311,0	684,5	0,18	71,59	72,79	81,71	0,18	73,93	78,54	83,77	0,08	0,08
38,0	186,0	12,7	0,4	7,3	403,5	70,8	93,2	580,2	334,6	282,6	309,2	681,0	0,18	71,61	72,79	82,37	0,18	73,91	78,56	83,45	0,08	0,08
39,0	187,0	12,6	0,4	7,5	405,4	71,0	92,7	581,0	332,9	281,2	307,4	677,6	0,18	71,59	72,78	85,01	0,18	73,87	78,57	83,13	0,07	0,08
40,0	188,0	12,5	0,4	7,7	407,8	71,0	93,2	581,4	331,3	279,5	305,5	674,3	0,18	71,56	72,75	86,48	0,18	73,84	78,60	82,82	0,07	0,08
41,0	189,0	12,4	0,4	7,9	409,4	70,9	93,7	581,5	329,8	278,0	303,8	671,1	0,18	71,53	72,73	86,31	0,18	73,84	78,62	83,47	0,08	0,08
42,0	190,0	12,3	0,4	7,9	410,9	71,0	93,5	581,8	328,2	276,4	302,0	667,8	0,18	71,50	72,71	85,66	0,18	73,84	78,66	85,49	0,08	0,08
43,0	191,0	12,2	0,4	8,0	412,5	71,0	93,1	583,9	326,6	275,0	300,3	664,7	0,18	71,51	72,71	84,98	0,18	73,90	78,67	86,94	0,07	0,08
44,0	192,0	12,0	0,4	8,0	413,8	70,8	93,9	586,4	325,1	274,0	298,5	661,6	0,18	71,56	72,69	84,36	0,18	73,91	78,68	86,83	0,07	0,08
45,0	193,0	11,9	0,4	8,1	416,3	70,7	93,3	587,9	323,7	273,0	296,7	658,6	0,18	71,53	72,69	83,78	0,18	73,89	78,66	86,47	0,07	0,08
46,0	194,0	11,9	0,4	8,1	419,3	71,3	93,0	591,3	322,3	272,1	295,3	655,6	0,18	71,60	72,83	83,32	0,18	73,96	78,64	86,09	0,07	0,08
47,0	195,0	11,7	0,4	8,3	423,2	70,9	92,8	594,9	320,8	271,4	293,4	652,7	0,18	71,67	72,96	82,85	0,18	74,04	78,54	85,70	0,08	0,08
48,0	196,0	11,6	0,4	8,4	428,2	70,9	92,9	601,9	319,6	270,7	291,9	649,8	0,18	71,72	72,99	82,46	0,18	74,18	78,54	85,29	0,08	0,08
49,0	197,0	11,5	0,3	8,8	433,1	71,0	94,1	607,2	318,2	270,2	290,4	647,0	0,18	71,69	72,94	82,09	0,18	74,16	78,57	84,90	0,07	0,08
50,0	198,0	11,3	0,3	9,1	441,1	70,8	94,2	616,3	316,9	270,0	288,7	644,3	0,18	71,72	73,06	81,73	0,18	74,17	78,58	84,52	0,08	0,08
51,0	199,0	11,2	0,3	9,5	449,8	70,9	94,2	630,9	315,8	269,7	287,2	641,6	0,18	71,74	73,08	81,84	0,18	74,17	78,58	84,17	0,08	0,08
52,0	200,0	11,1	0,4	9,8	462,0	71,0	94,7	646,0	314,8	269,4	285,7	639,0	0,18	71,71	73,05	84,38	0,18	74,12	78,58	83,81	0,07	0,08
53,0	201,0	10,9	0,5	10,1	470,0	70,8	95,0	659,4	313,9	269,5	284,2	636,5	0,18	71,64	72,99	86,34	0,18	74,02	78,58	83,47	0,08	0,08
54,0	202,0	10,8	0,5	10,3	477,8	71,0	95,9	672,1	313,3	269,3	283,0	634,0	0,18	71,64	73,00	86,39	0,18	73,98	78,63	83,16	0,08	0,09
55,0	203,0	10,6	0,6	10,4	482,4	71,0	96,7	681,9	312,6	269,4	281,7	631,6	0,18	71,62	72,98	85,85	0,18	74,00	78,63	82,86	0,08	0,09
56,0	204,0	10,5	0,6	10,5	484,8	70,9	96,4	688,2	312,2	269,5	280,6	629,2	0,18	71,65	73,01	85,26	0,18	74,04	78,63	82,97	0,08	0,09
57,0	205,0	10,3	0,6	10,4	486,6	70,7	97,3	693,0	311,9	269,9	279,5	626,9	0,18	71,64	72,95	84,60	0,18	74,07	78,67	84,97	0,07	0,09
58,0	206,0	10,2	0,6	10,4	484,6	70,9	97,3	695,8	311,7	270,1	278,5	624,7	0,18	71,63	72,91	84,05	0,18	74,06	78,72	86,75	0,08	0,09
59,0	207,0	10,1	0,6	10,2	482,7	71,0	97,0	695,7	311,8	270,5	277,6	622,6	0,18	71,65	72,90	83,49	0,18	74,05	78,76	86,86	0,08	0,09
60,0	208,0	10,0	0,6	10,1	479,5	70,9	97,3	695,0	311,9	271,0	276,8	620,5	0,18	71,67	72,88	83,05	0,18	74,04	78,78	86,54	0,07	0,09
61,0	209,0	9,9	0,5	10,0	476,3	70,8	97,3	692,6	312,0	271,6	276,0	618,5	0,18	71,69	72,85	82,69	0,18	74,09	78,78	86,18	0,08	0,09
62,0	210,0	9,7	0,5	9,9	472,6	71,2	97,4	689,4	312,4	272,2	275,3	616,6	0,18	71,70	72,85	82,32	0,18	74,09	78,78	85,80	0,07	0,09
63,0	211,0	9,6	0,5	9,7	468,9	71,2	95,2	688,1	312,8	272,6	274,5	614,8	0,18	71,73	72,87	81,92	0,18	74,25	78,81	85,38	0,08	0,08
64,0	212,0	9,5	0,4	9,8	467,1	71,1	96,0	685,0	313,3	273,5	274,0	612,9	0,18	71,81	72,92	81,57	0,18	74,29	78,81	85,01	0,08	0,08
65,0	213,0	9,3	0,4	9,8	464,8	71,0	95,6	683,4	313,8	274,3	273,4	611,2	0,18	71,79	72,90	82,53	0,18	74,25	78,83	84,66	0,08	0,08
66,0	214,0	9,2	0,4	9,8	461,9	70,7	96,1	681,0	314,4	275,0	272,9	609,6	0,18	71,79	72,86	85,33	0,18	74,19	78,83	84,31	0,07	0,08
67,0	215,0	9,1	0,3	9,7	460,1	71,1	96,2	678,9	315,2	276,0	272,4	608,0	0,18	71,77	72,86	86,72	0,18	74,19	78,84	83,99	0,08	0,08
68,0	216,0	9,0	0,3	9,7	456,5	70,8	96,6	677,0	316,0	276,9	272,0	606,4	0,18	71,77	72,85	86,53	0,18	74,16	78,83	83,70	0,08	0,08
69,0	217,0	8,9	0,3	9,6	454,1	70,9	96,4	673,8	316,9	277,8	271,8	605,0	0,18	71,77	72,83	85,98	0,18	74,19	78,84	83,41	0,08	0,08
70,0	218,0	8,8	0,3	9,5	451,9	71,1	95,9	671,0	317,9	278,7	271,6	603,5	0,18	71,80	72,87	85,36	0,18	74,19	78,85	83,11	0,08	0,08
71,0	219,0	8,7	0,3	9,4	450,8	71,2	95,5	669,1	318,7	279,4	271,4	602,1	0,18	71,80	72,88	84,75	0,18	74,18	78,86	82,83	0,07	0,08
72,0	220,0	8,6	0,3	9,4	448,7	71,2	95,5	666,9	319,6	280,1	271,4	600,7	0,18	71,79	72,86	84,20	0,18	74,24	78,84	83,72	0,08	0,08
73,0	221,0	8,5	0,3	9,3	447,0	71,3	95,4	666,4	320,5	280,9	271,3	599,4	0,18	71,79	72,85	83,61	0,18	74,23	78,87	85,97	0,08	0,08
74,0	222,0	8,4	0,3	9,3	445,6	71,2	95,3	665,2	321,3	281,6	271,3	598,1	0,18	71,78	72,86	83,06	0,18	74,25	78,91	87,04	0,07	0,08
75,0	223,0	8,2	0,3	9,3	443,0	71,3	95,7	663,4	321,9	282,2	271,2	596,9	0,18	71,79	72,88	82,60	0,18	74,21	78,91	86,86	0,08	0,08
76,0	224,0	8,1	0,3	9,2	440,4	71,1	95,0	661,4	322,6	283,2	271,2	595,7	0,18	71,80	72,90	82,18	0,18	74,26	78,91	86,48	0,08	0,08
77,0	225,0	8,0	0,3	9,1	438,4	71,1	95,2	657,7	322,9	284,0	271,2	594,6	0,18	71,82	72,92	81,83	0,18	74,28	78,92	86,09	0,07	0,08
78,0	226,0	7,9	0,2	9,1	436,9	71,4	95,4	656,4	323,3	284,5	271,1	593,5	0,18	71,83	72,91	81,44	0,18	74,28	78,89	85,69	0,07	0,08
79,0	227,0	7,8	0,2	9,1	434,9	71,2	95,6	653,9	323,8	285,3	271,1	592,3	0,18	71,85	72,91	81,99	0,18	74,32	78,90	85,30	0,07	0,08
80,0	228,0	7,7	0,2	9,0	433,1	71,5	94,2	652,2	324,4	286,1	271,1	591,3	0,18	71,87	72,90	84,74	0,18	74,24	78,91	84,91	0,08	0,08
81,0	229,0	7,6	0,2	8,9	430,7	71,5	95,0	650,2	325,1	286,8	270,9	590,3	0,18	71,84	72,90	86,61	0,18	74,25	78,90	84,56	0,07	0,08
82,0	230,0	7,5	0,2	8,9	429,3	71,4	94,4	647,4	325,8	287,6	270,8	589,4	0,18	71,87	72,92	86,60	0,18	74,34	78,90	84,20	0,08	0,08
83,0	231,0	7,4	0,2	8,8	427,2	71,3	94,3	643,5	326,5	288,2	270,7	588,5	0,18	71,88	72,96	86,05	0,18	74,32	78,92	83,83	0,07	0,08
84,0	232,0	7,3	0,2	8,7	425,1	71,4	95,0	640,4	327,0	289,0	270,4	587,6	0,18	71,91	72,96	85,42	0,18	74,27	78,90	83,54	0,07	0,08
85,0	233,0	7,2	0,2	8,7	423,3	70,9	94,2	637,8	327,5	289,8	270,3	586,8	0,18	71,94	72,95	84,80	0,18	74,27	78,93	83,23	0,08	0,08
86,0	234,0	7,2	0,2	8,6	421,5	71,2	94,6	633,6	327,9	290,5	270,2	586,1	0,18	71,97	72,97	84,21	0,18	74,29	78,94	82,95	0,08	0,08
87,0	235,0	7,1	0,2	8,5	418,7	71,3	93,6	629,1	328,2	290,9	270,0	585,4	0,18	71,95	72,96	83,64	0,18	74,29	78,95	83,61	0,08	0,08

88,0	236,0	7,0	0,2	8,4	416,2	71,3	93,3	625,1	328,5	291,4	269,9	584,7	0,18	71,92	72,93	83,12	0,18	74,25	78,99	85,76	0,07	0,08
89,0	237,0	6,9	0,2	8,3	413,7	71,1	93,1	622,1	328,8	291,9	269,7	584,2	0,18	71,93	72,94	82,54	0,18	74,26	78,98	86,98	0,07	0,08
90,0	238,0	6,8	0,2	8,2	411,4	71,3	93,6	618,0	329,2	292,5	269,5	583,7	0,18	71,96	72,99	82,10	0,18	74,33	79,00	86,84	0,08	0,08
91,0	239,0	6,7	0,3	8,1	409,9	71,3	93,3	614,9	329,7	292,9	269,3	583,2	0,18	71,96	73,02	81,68	0,18	74,37	79,00	86,45	0,07	0,08
92,0	240,0	6,7	0,3	8,1	408,8	71,3	93,2	612,5	330,1	293,2	269,1	582,8	0,18	71,98	73,00	81,48	0,18	74,36	78,99	86,04	0,08	0,08
93,0	241,0	6,6	0,2	8,2	408,8	71,6	92,9	610,1	330,6	293,3	268,9	582,4	0,18	71,99	72,99	83,77	0,18	74,38	78,99	85,64	0,07	0,08
94,0	242,0	6,5	0,2	8,2	407,6	71,5	92,4	610,0	331,1	293,5	268,8	582,0	0,18	72,01	72,99	86,32	0,18	74,37	78,93	85,23	0,08	0,08
95,0	243,0	6,4	0,2	8,2	407,9	71,4	93,1	608,4	331,6	293,6	268,4	581,7	0,18	72,02	73,00	86,77	0,18	74,43	78,93	84,83	0,07	0,08
96,0	244,0	6,3	0,2	8,3	407,7	71,2	93,4	608,0	332,2	293,7	268,2	581,3	0,18	72,01	73,00	86,33	0,18	74,45	78,95	84,49	0,07	0,08
97,0	245,0	6,2	0,2	8,3	407,5	71,4	93,1	606,6	332,7	293,6	267,9	581,0	0,18	71,98	73,02	85,69	0,18	74,39	78,95	84,12	0,08	0,08
98,0	246,0	6,2	0,3	8,3	407,7	71,4	92,0	606,4	333,2	293,4	267,8	580,7	0,18	72,01	73,12	85,05	0,18	74,53	78,96	83,76	0,07	0,08
99,0	247,0	6,1	0,3	8,4	406,6	71,3	92,8	607,2	333,7	293,5	267,5	580,4	0,18	72,09	73,25	84,46	0,18	74,59	78,92	83,44	0,07	0,08
100,0	248,0	6,0	0,3	8,4	406,0	71,3	92,1	605,3	334,2	293,5	267,3	580,1	0,18	72,14	73,37	83,90	0,18	74,68	78,86	83,12	0,08	0,07
101,0	249,0	5,9	0,3	8,4	406,8	71,2	91,5	606,2	334,5	293,5	267,0	579,8	0,18	72,14	73,39	83,35	0,18	74,66	78,83	82,83	0,07	0,07
102,0	250,0	5,8	0,3	8,5	407,3	70,9	92,1	605,7	335,2	293,5	266,9	579,5	0,18	72,09	73,37	82,83	0,18	74,56	78,84	82,77	0,08	0,08
103,0	251,0	5,7	0,3	8,5	405,0	71,2	92,2	605,0	335,8	293,3	266,6	579,2	0,18	72,04	73,29	82,32	0,18	74,48	78,89	84,85	0,08	0,07
104,0	252,0	5,7	0,3	8,3	401,5	71,5	92,0	602,6	336,5	293,2	266,5	578,9	0,18	72,00	73,26	81,84	0,18	74,42	78,96	86,76	0,07	0,08
105,0	253,0	5,6	0,3	8,0	397,5	71,2	92,2	598,6	337,3	293,2	266,3	578,7	0,18	72,00	73,22	81,40	0,18	74,44	79,01	87,02	0,08	0,07
106,0	254,0	5,5	0,3	7,8	395,2	71,4	91,6	595,5	338,2	293,2	266,2	578,4	0,18	71,99	73,17	82,00	0,18	74,44	79,03	86,74	0,07	0,07
107,0	255,0	5,5	0,3	7,8	394,1	71,2	92,1	592,7	339,2	292,9	266,1	578,1	0,18	72,02	73,13	84,79	0,18	74,41	79,04	86,33	0,07	0,07
108,0	256,0	5,4	0,3	7,6	393,6	71,1	91,9	592,5	340,1	292,8	265,8	577,8	0,18	72,01	73,12	86,49	0,18	74,41	79,07	85,88	0,08	0,08
109,0	257,0	5,3	0,3	7,7	392,8	71,5	92,0	590,7	341,2	292,8	265,8	577,5	0,18	72,00	73,10	86,37	0,18	74,44	79,09	85,49	0,07	0,07
110,0	258,0	5,2	0,3	7,7	391,8	71,4	91,7	588,9	342,4	292,6	265,6	577,2	0,18	72,01	73,11	85,84	0,18	74,44	79,10	85,08	0,08	0,07
111,0	259,0	5,2	0,3	7,7	392,2	71,4	89,4	586,5	343,7	292,3	265,4	576,9	0,18	72,05	73,12	85,45	0,18	74,44	79,08	84,64	0,07	0,08
112,0	260,0	5,1	0,3	7,7	390,8	71,4	89,9	586,4	344,8	291,9	265,2	576,7	0,18	72,02	73,11	85,84	0,18	74,49	79,07	84,21	0,08	0,07
113,0	261,0	5,1	0,3	7,8	389,1	71,3	89,4	582,7	346,3	291,6	265,0	576,5	0,18	72,04	73,06	86,40	0,18	74,49	79,10	83,77	0,08	0,07
114,0	262,0	5,0	0,2	7,6	385,9	71,1	88,8	579,3	347,5	291,2	264,6	576,2	0,18	71,98	73,09	87,12	0,18	74,48	79,10	83,39	0,07	0,07
115,0	263,0	4,9	0,3	7,4	383,9	71,1	90,2	575,0	349,0	290,6	264,5	576,0	0,18	72,04	73,11	86,63	0,18	74,51	79,10	83,07	0,08	0,07
116,0	264,0	4,9	0,3	7,4	382,5	71,2	90,2	571,3	350,3	290,3	264,3	575,8	0,18	72,10	73,11	86,10	0,18	74,49	79,05	82,73	0,07	0,07
117,0	265,0	4,8	0,4	7,3	380,5	71,2	89,9	567,9	351,4	290,0	264,1	575,5	0,18	72,08	73,10	85,59	0,18	74,48	78,97	83,25	0,07	0,07
118,0	266,0	4,7	0,4	7,3	379,9	71,3	89,5	563,9	352,5	289,5	264,1	575,2	0,18	72,00	73,12	85,10	0,18	74,41	78,94	85,37	0,07	0,07
119,0	267,0	4,6	0,4	7,3	378,3	71,2	89,8	561,6	353,6	289,1	264,0	574,9	0,18	72,00	73,13	84,67	0,18	74,42	78,93	86,93	0,08	0,07
120,0	268,0	4,6	0,4	7,3	378,0	71,1	90,3	559,7	354,7	288,5	264,0	574,6	0,18	72,04	73,12	84,24	0,18	74,34	78,95	86,90	0,08	0,07
121,0	269,0	4,5	0,3	7,3	377,7	71,1	90,5	558,7	355,8	288,1	263,9	574,3	0,18	72,03	73,10	83,89	0,18	74,34	78,94	86,57	0,07	0,07
122,0	270,0	4,4	0,3	7,4	376,9	70,9	90,1	556,9	356,8	287,6	263,9	573,9	0,18	72,00	73,11	83,56	0,18	74,38	78,91	86,15	0,07	0,07
123,0	271,0	4,4	0,3	7,4	375,3	71,0	90,1	555,1	357,9	287,0	263,8	573,5	0,18	71,96	73,11	83,20	0,18	74,33	78,82	85,73	0,07	0,07
124,0	272,0	4,3	0,4	7,3	372,3	70,7	89,9	553,1	358,9	286,4	263,8	573,1	0,18	71,92	73,12	82,87	0,18	74,29	78,76	85,35	0,07	0,07
125,0	273,0	4,3	0,4	7,1	369,0	71,0	89,7	549,4	360,1	285,8	263,8	572,6	0,18	71,94	73,13	82,57	0,18	74,30	78,72	84,97	0,08	0,07
126,0	274,0	4,2	0,5	6,9	365,2	70,8	90,0	545,1	361,4	285,4	263,7	572,0	0,18	71,92	73,12	82,23	0,18	74,27	78,72	84,59	0,07	0,07
127,0	275,0	4,2	0,6	6,7	360,4	70,9	89,9	540,2	363,0	284,8	263,6	571,5	0,18	71,93	73,13	81,95	0,18	74,23	78,72	84,19	0,08	0,07
128,0	276,0	4,1	0,6	6,6	357,7	71,0	89,3	535,8	364,6	284,1	263,5	570,9	0,18	71,99	73,22	81,65	0,18	74,40	78,71	83,83	0,07	0,07
129,0	277,0	4,1	0,5	6,5	355,3	71,1	89,3	532,0	366,4	283,4	263,4	570,4	0,18	72,03	73,18	81,41	0,18	74,45	78,79	83,50	0,08	0,07
130,0	278,0	4,0	0,5	6,5	352,8	71,1	88,2	528,6	368,0	282,9	263,2	569,7	0,18	72,01	73,16	83,82	0,18	74,41	78,82	83,13	0,08	0,07
131,0	279,0	4,0	0,5	6,5	350,0	70,8	87,9	524,5	369,7	282,1	263,1	569,1	0,18	71,97	73,14	86,00	0,18	74,36	78,84	82,79	0,08	0,07
132,0	280,0	3,9	0,5	6,4	347,9	71,3	87,5	520,1	371,5	281,0	262,9	568,6	0,18	71,93	73,13	85,72	0,18	74,30	78,85	83,43	0,08	0,07
133,0	281,0	3,8	0,5	6,3	345,8	71,1	87,3	516,5	373,2	280,1	262,7	567,9	0,18	71,98	73,21	85,18	0,18	74,41	78,88	85,58	0,07	0,07
134,0	282,0	3,8	0,5	6,3	342,5	70,9	87,5	513,2	375,0	279,2	262,3	567,4	0,18	72,02	73,27	84,62	0,18	74,49	78,91	86,97	0,07	0,07
135,0	283,0	3,7	0,5	6,1	341,0	71,1	86,8	509,8	376,5	278,0	262,1	566,7	0,18	72,07	73,41	84,10	0,18	74,59	78,87	86,82	0,07	0,07
136,0	284,0	3,7	0,5	6,2	339,2	71,2	87,2	506,9	377,9	277,0	261,8	566,1	0,18	72,05	73,45	83,71	0,18	74,60	78,88	86,41	0,08	0,07
137,0	285,0	3,7	0,4	6,2	337,4	71,1	87,2	503,8	379,3	276,0	261,5	565,6	0,18	72,09	73,52	83,30	0,18	74,65	78,84	86,00	0,07	0,07
138,0	286,0	3,6	0,4	6,2	335,8	70,7	87,2	501,1	380,6	275,0	261,1	565,0	0,18	72,17	73,59	82,89	0,18	74,74	78,78	85,57	0,08	0,06
139,0	287,0	3,6	0,4	6,1	333,6	70,9	87,8	498,4	382,0	274,1	260,7	564,3	0,18	72,08	73,51	82,53	0,18	74,62	78,78	85,15	0,08	0,06
140,0	288,0	3,5	0,4	5,9	331,5	70,8	87,1	495,6	383,1	273,1	260,4	563,7	0,18	72,04	73,52	82,20	0,18	74,61	78,82	84,76	0,07	0,06
141,0	289,0	3,5	0,4	5,8	328,4	70,9	86,7	491,5	384,3	272,0	260,0	563,1	0,18	71,98	73,47	81,86	0,18	74,56	78,83	84,33	0,08	0,06
142,0	290,0	3,5	0,4	5,7	326,0	70,9	86,6	487,8	385,4	271,0	259,7	562,5	0,18	71,88	73,40	82,16	0,18	74,46	78,79	83,95	0,08	0,06
143,0	291,0	3,4	0,4	5,7	323,9	70,9	86,5	484,6	386,3	269,8	259,2	561,9	0,18	71,82	73,34	84,96	0,18	74,36	78,77	83,57	0,08	0,06
144,0	292,0	3,4	0,4	5,7	321,2	70,4	86,3	480,9	387,5	268,4	258,8	561,4	0,18	71,78	73,26	85,99	0,18	74,29	78,76	83,17	0,08	0,06
145,0	293,0	3,3	0,4	5,6	318,6	71,0	85,9	477,4	388,7	267,4	258,3	561,0	0,18	71,85	73,38	85,54	0,18	74,46	78,79	82,80	0,08	0,06
146,0	294,0	3,3	0,5	5,4	316,2	71,1	85,9	472,5	390,0	266,4	257,9	560,5	0,18	71,88	73,48	84,96	0,18	74,51	78,77	83,28	0,07	0,06
147,0	295,0	3,3	0,5	5,4	315,2	71,0	85,2	469,8	391,4	265,3	257,3	560,0	0,18	71,95	73,48	84,39	0,18	74,54	78,69	85,15	0,08	0,06
148,0	296,0	3,2	0,5	5,5	314,8	70,9	85,7	466,9	393,0	264,2	256,8	559,5	0,18	72,00	73,48	83,93	0,18	74,52	78,66	86,71	0,07	0,06
149,0	297,0	3,2	0,5	5,5	313,9	70,8	85,6	464,6	394,6	263,0	256,2	559,1	0,18	71,98	73,47	83,51	0,18	74,43	78,67	86,75	0,07	0,06
150,0	298,0	3,1	0,4	5,5	311,1	70,5	86,0	462,1	396,1	261,8	255,7	558,7	0,18	71,98	73,45	83,09	0,18	74,48	78,65	86,41	0,07	0,06
151,0	299,0	3,2	0,5	5,3	308,5	70,7	85,9	459,5	397,7	260,8	255,1	558,3	0,18	71,92	73,42	82,72	0,18	74,46	78,61	86,01	0,08	0,06
152,0	300,0	3,1	0,5	5,1	302,4	70,9	86,0	456,6	399,4	259,7	254,6	557,9	0,18	71,86	73,39	82,35	0,18	74,45	78,60	85,57	0,08	0,06
153,0	301,0	3,1	0,8	4,3	296,8	70,8	85,0	451,1	401,0	258,7	254,0	557,4	0,18	71,80	73,35	82,03	0,18	74,51	78,58	85,12	0,08	0,06
154,0	302,0	3,1	0,8	4,2	293,4	70,6	84,6	443,8	402,4	257,5	253,4	557,0	0,18	71,79	73,35	81,70	0,18	74,52	78,53	84,70	0,08	0,06
155,0	303,0	3,0	0,7	4,1	289,9	70,5	84,7	438,6	403,6	256,3	252,8	556,6	0,18	71,77	73,34	82,54	0,18	74,55	78,42	84,27	0,07	0,06
156,0	304,0	3,0	0,7	4,1	286,6	70,6	83,9	431,4	404,6	255,0	252,3	556,2	0,18	71,73	73,30	85,43	0,18	74,51	78,41	83,82	0,07	0,06
157,0	305,0	3,0	0,7	4,0	283,8	70,8	84,1	426,7	405,7	253,7	251,4	555,8	0,18	71,69	73,28	85,88	0,18	74,47	78,29	83,39	0,07	0,06
158,0	306,0	3,0	0,7	4,1	280,9	70,6	83,9	421,2	406,8	252,6	250,5	555,5	0,18	71,65	73,34	85,37	0,18	74,47	78,14	82,98	0,08	0,06
159,0	307,0	2,9	0,7	4,0	279,1	70,1	84,0	417,9	407,7	251,3	249,7	555,2	0,18	71,59	73,29	84,83	0,18	74,48	78,13	82,61	0,08	0,06
160,0	308,0	2,9	0,7	4,0	277,1	70,3	83,6	413,3	408,6	250,0	248,7	554,9	0,18	71,54	73,25	84,29	0,18	74,42	78,21	83,85	0,07	0,06
161,0	309,0	2,9	0,6	4,0	275,0	70,3	82,9	409,8	409,2	248,7	248,0	554,6	0,18	71,54	73,21	83,78	0,18	74,38	78,28	85,98	0,07	0,05
162,0	310,0	2,9	0,6	4,0	273,7	70,4	83,2	406,0	409,8	247,4	247,0	554,3	0,18	71,51	73,19	83,25	0,18	74,35	78,28	86,97	0,08	0,05
163,0	311,0	2,9	0,6	4,0	271,8	70,4	83,6	403,5	410,3	246,1	246,0	554,1	0,18	71,51	73,15	82,79	0,18	74,35	78,18	86,74	0,08	0,05
164,0	312,0	2,9	0,6	4,1	270,3	70,3	83,3	399,1	410,8	244,7	244,9	554,0	0,18	71,51	73,17	82,36	0,18	74,36	78,14	86,32	0,08	0,05
165,0	313,0	2,8	0,6	4,0	268,7	70,3	83,1	396,2	410,9	243,4	244,0	553,8	0,18	71,49	73,21	82,01	0,18	74,40	78,14	85,88	0,08	0,05
166,0	314,0	2,8	0,7	4,0	266,7	70,3	83,4	393,4	411,3	241,8	243,0	553,7	0,18	71,51	73,34	81,72	0,18	74,53	78,17	85,37	0,07	0,05
167,0	315,0	2,8	0,7	3,9	265,2	70,3	82,2	390,2	411,7	240,6	242,0	553,6	0,18	71,50	73,33	84,30	0,18	74,47	78,18	84,91	0,08	0,05
168,0	316,0	2,8	0,6	4,0	263,8	70,2	82,5	386,9	411,9	239,3	240,9	553,5	0,18	71,52	73,37	86,03	0,18	74,57	78,19	84,45	0,08	0,05
169,0	317,0	2,8	0,6	3,9	262,2	70,4	81,9	384,3	412,2	238,1	239,8	553,4	0,18	71,50	73,33	85,59	0,18	74,55	78,14	84,02	0,08	0,05
170,0	318,0	2,8	0,6	3,9	260,6	70,5	82,1	382,2	412,5	236,9	238,9	553,3	0,18	71,46	73,27	85,03	0,18	74,49	78,10	83,62	0,08	0,05
171,0	319,0	2,8	0,5	3,9	259,7	70,4	82,6	380,1	412,6	235,8	237,9	553,3	0,18	71,45	73,23	84,53	0,18	74,44	78,07	83,20	0,07	0,05
172,0	320,0	2,7	0,5	3,9	258,1	70,3	82,4	377,5	412,7	234,6	236,9	553,3	0,18	71,43	73,20	84,02	0,18	74,43	78,06	82,82	0,07	0,05
173,0	321,0	2,7	0,5	3,9	257,2	70,3	82,5	375,2	412,3	233,2	235,9	553,4	0,18	71,44	73,15	83,55	0,18	74,43	78,04	83,76	0,08	0,05
174,0	322,0	2,6	0,5	3,9	255,5	70,5	81,8	373,4	411,9	232,2	234,9	553,4	0,18	71,42	73,11	83,05	0,18	74,42	78,14	85,99	0,08	0,05
175,0	323,0	2,7	0,5	3,8	254,5	70,2	81,6	370,8	411,5	231,0	233,9	553,4	0,18	71,45	73,16	82,56	0,18	74,34	78,03	87,16	0,08	0,05
176,0	324,0	2,7	0,5	3,9	253,3	70,2	81,4	368,5	411,2	229,9	232,9	553,5	0,18	71,50	73,21	82,14	0,18	74,40	78,01	86,95	0,08	0,05
177,0	325,0	2,7	0,5	3,9	252,0	70,5	80,6	366,9	410,7	228,8	231,9	553,5	0,18	71,45	73,16	81,75	0,18	74,35	78,42	86,23	0,08	0,05
178,0	326,0	2,6	0,5	3,9	251,1	70,5	80,5	365,3	410,2	227,6	230,9	553,5	0,18	71,42	73,13	83,53	0,18	74,23	78,48	85,79	0,08	0,05
179,0	327,0	2,6	0,5	3,9	249,7	70,4	80,9	362,3	409,8	226,6	230,0	553,5	0,18	71,38	73,14	85,93	0,18	74,15	78,52	85,32	0,07	0,05
180,0	328,0	2,6	0,5	3,9	248,6	70,1	80,6	361,0	409,5	225,5	229,0	553,6	0,18	71,40	73,21	85,87	0,18	74,21	78,54	84,81	0,08	0,05

181,0	329,0	2,6	0,5	3,9	247,2	70,2	81,0	359,3	409,2	224,6	228,0	553,6	0,18	71,45	73,38	85,27	0,18	74,27	78,58	84,39	0,07	0,05
182,0	330,0	2,6	0,5	3,8	245,9	70,2	80,3	357,5	409,0	223,8	227,1	553,6	0,18	71,48	73,47	84,65	0,18	74,29	78,52	83,94	0,07	0,05
183,0	331,0	2,6	0,5	3,8	245,3	70,3	80,7	355,4	408,9	222,8	226,1	553,6	0,18	71,51	73,46	84,14	0,18	74,25	78,43	83,55	0,08	0,05
184,0	332,0	2,5	0,6	3,8	244,4	70,2	80,7	353,8	409,1	221,9	225,2	553,6	0,18	71,47	73,41	83,61	0,18	74,24	78,37	83,15	0,08	0,05
185,0	333,0	2,5	0,6	3,8	243,2	70,1	80,8	351,8	409,3	220,8	224,3	553,6	0,18	71,42	73,40	83,13	0,18	74,18	78,33	82,73	0,08	0,05
186,0	334,0	2,5	0,6	3,8	242,0	70,0	80,5	349,7	409,6	220,0	223,4	553,7	0,18	71,38	73,33	82,71	0,18	74,16	78,35	83,55	0,08	0,05
187,0	335,0	2,5	0,6	3,8	241,2	70,1	81,2	348,7	409,8	219,1	222,5	553,7	0,18	71,31	73,24	82,29	0,18	74,05	78,37	85,59	0,08	0,05
188,0	336,0	2,5	0,6	3,8	240,7	70,0	80,6	347,2	410,0	218,4	221,6	553,8	0,18	71,22	73,13	81,88	0,18	74,00	78,44	86,76	0,08	0,05
189,0	337,0	2,5	0,6	3,8	239,5	70,0	80,1	345,2	410,3	217,5	220,8	553,8	0,18	71,24	73,10	82,31	0,18	73,95	78,46	86,49	0,08	0,05
190,0	338,0	2,5	0,6	3,8	238,2	70,2	80,3	343,7	410,6	216,6	220,1	553,9	0,18	71,28	73,19	84,88	0,18	74,01	78,44	85,96	0,08	0,05
191,0	339,0	2,5	0,6	3,8	237,5	70,2	80,4	342,5	410,8	215,9	219,2	554,0	0,18	71,31	73,25	85,85	0,18	74,06	78,38	85,45	0,08	0,05
192,0	340,0	2,5	0,6	3,7	237,0	70,0	80,3	340,4	411,3	215,0	218,4	554,0	0,18	71,34	73,35	85,29	0,18	74,04	78,30	84,98	0,07	0,05
193,0	341,0	2,4	0,6	3,7	236,1	70,1	80,4	339,0	411,6	214,1	217,7	554,1	0,18	71,29	73,34	84,73	0,18	74,05	78,32	84,55	0,08	0,05
194,0	342,0	2,4	0,6	3,7	235,1	70,0	80,5	337,8	411,9	213,3	217,0	554,1	0,18	71,25	73,26	84,19	0,18	74,01	78,28	84,16	0,08	0,05
195,0	343,0	2,3	0,6	3,7	234,6	70,2	80,6	336,7	412,0	212,6	216,4	554,1	0,18	71,19	73,19	83,73	0,18	73,99	78,29	83,72	0,08	0,05
196,0	344,0	2,4	0,6	3,7	233,8	70,3	80,2	335,5	412,2	211,9	215,6	554,2	0,18	71,22	73,26	83,24	0,18	74,07	78,29	83,27	0,08	0,05
197,0	345,0	2,4	0,5	3,7	233,5	70,2	80,5	333,4	412,3	210,9	215,0	554,1	0,18	71,22	73,23	82,77	0,18	74,02	78,25	82,79	0,08	0,05
198,0	346,0	2,3	0,6	3,7	232,2	70,1	80,1	333,3	412,2	210,3	214,2	554,1	0,18	71,24	73,22	82,35	0,18	73,95	78,17	83,26	0,07	0,05
199,0	347,0	2,3	0,5	3,7	231,8	70,2	80,7	331,9	412,3	209,6	213,6	554,1	0,18	71,20	73,14	81,88	0,18	73,93	78,19	85,35	0,08	0,04
200,0	348,0	2,3	0,5	3,7	231,4	70,1	80,4	330,4	412,1	208,8	213,0	554,1	0,18	71,17	73,05	82,07	0,18	73,83	78,20	86,82	0,08	0,04
201,0	349,0	2,3	0,5	3,7	230,5	70,2	80,1	329,3	411,8	208,0	212,4	554,0	0,18	71,15	72,96	84,60	0,18	73,77	78,19	86,65	0,07	0,04
202,0	350,0	2,3	0,5	3,6	230,0	70,2	80,1	327,8	411,5	207,3	211,7	554,0	0,18	71,12	72,94	86,05	0,18	73,76	78,19	86,17	0,08	0,04
203,0	351,0	2,3	0,5	3,6	229,1	70,0	80,2	327,3	410,8	206,7	211,0	554,0	0,18	71,11	72,96	85,61	0,18	73,78	78,15	85,71	0,07	0,04
204,0	352,0	2,3	0,5	3,6	228,7	70,3	80,0	325,9	410,1	206,1	210,4	553,9	0,18	71,14	73,07	85,01	0,18	73,81	78,19	85,20	0,08	0,05
205,0	353,0	2,3	0,5	3,6	228,4	70,1	79,7	324,5	409,1	205,4	209,8	553,8	0,18	71,19	73,17	84,37	0,18	73,81	78,12	84,71	0,08	0,04
206,0	354,0	2,3	0,5	3,6	227,9	70,2	79,1	324,1	407,9	204,8	209,3	553,7	0,18	71,19	73,25	83,81	0,18	73,87	78,04	84,24	0,08	0,04
207,0	355,0	2,2	0,5	3,5	227,6	70,1	79,3	322,5	406,9	204,2	208,5	553,6	0,18	71,24	73,33	83,28	0,18	73,93	77,98	83,80	0,08	0,04
208,0	356,0	2,2	0,5	3,6	226,4	70,1	79,6	321,8	405,8	203,6	208,0	553,5	0,18	71,25	73,38	82,78	0,18	73,96	77,96	83,37	0,08	0,04
209,0	357,0	2,2	0,5	3,6	226,7	70,2	79,5	320,3	404,6	203,2	207,4	553,3	0,18	71,28	73,29	82,33	0,18	73,89	77,89	82,95	0,07	0,04
210,0	358,0	2,2	0,5	3,6	226,6	70,1	79,8	319,6	403,3	202,5	206,8	553,3	0,18	71,30	73,30	81,94	0,18	73,90	77,92	83,14	0,07	0,04
211,0	359,0	2,2	0,6	3,5	225,8	70,2	79,2	318,8	402,1	202,0	206,3	553,2	0,18	71,28	73,25	82,38	0,18	73,89	77,97	85,03	0,08	0,04
212,0	360,0	2,2	0,5	3,5	225,3	70,2	78,7	318,2	400,7	201,4	205,7	553,0	0,18	71,31	73,24	84,72	0,18	73,98	77,97	86,61	0,07	0,04
213,0	361,0	2,2	0,5	3,5	225,0	70,2	79,4	317,3	399,4	201,0	205,1	553,0	0,18	71,36	73,26	85,74	0,18	74,05	77,97	86,79	0,08	0,04
214,0	362,0	2,1	0,6	3,5	224,2	70,4	79,2	316,4	398,1	200,5	204,5	552,8	0,18	71,33	73,29	85,21	0,18	74,01	77,98	86,33	0,07	0,04
215,0	363,0	2,1	0,6	3,5	224,0	70,2	79,3	315,8	396,9	199,9	203,9	552,7	0,18	71,30	73,23	84,58	0,18	73,97	78,00	85,83	0,08	0,04
216,0	364,0	2,1	0,6	3,5	223,9	70,3	79,6	315,6	395,8	199,5	203,2	552,5	0,18	71,28	73,23	84,05	0,18	73,94	77,99	85,35	0,08	0,04
217,0	365,0	2,1	0,5	3,4	223,4	70,2	79,5	314,3	394,7	199,0	202,7	552,2	0,18	71,27	73,16	83,54	0,18	73,91	77,98	84,92	0,07	0,04
218,0	366,0	2,1	0,5	3,4	222,2	70,2	79,7	314,0	393,8	198,7	202,1	552,0	0,18	71,26	73,12	83,09	0,18	73,97	77,95	84,47	0,08	0,04
219,0	367,0	2,1	0,5	3,4	222,1	70,3	79,2	312,7	392,8	198,2	201,7	551,7	0,18	71,28	73,31	82,61	0,18	73,99	77,92	84,00	0,08	0,04
220,0	368,0	2,1	0,5	3,4	221,4	70,2	79,4	311,7	392,0	197,9	201,1	551,4	0,18	71,28	73,41	82,14	0,18	74,01	77,93	83,53	0,07	0,04
221,0	369,0	2,1	0,5	3,4	220,7	70,3	79,0	310,6	391,2	197,3	200,5	551,0	0,18	71,30	73,42	81,71	0,18	74,01	77,88	83,09	0,07	0,04
222,0	370,0	2,1	0,5	3,4	220,4	70,4	79,0	310,1	390,5	197,0	200,0	550,6	0,18	71,31	73,48	83,17	0,18	74,03	77,84	82,76	0,07	0,04
223,0	371,0	2,0	0,5	3,4	220,1	70,2	78,7	309,3	389,8	196,6	199,4	550,2	0,18	71,32	73,44	85,30	0,18	74,05	77,86	84,43	0,08	0,04
224,0	372,0	2,0	0,5	3,4	219,4	70,5	78,9	308,2	389,2	196,2	198,8	549,8	0,18	71,32	73,46	85,59	0,18	74,00	77,85	86,32	0,08	0,04
225,0	373,0	2,0	0,5	3,4	218,8	70,3	79,2	306,7	388,4	195,9	198,3	549,3	0,18	71,33	73,51	85,03	0,18	74,04	77,83	86,88	0,07	0,04
226,0	374,0	2,0	0,5	3,4	218,4	70,2	79,0	306,3	387,6	195,5	197,7	548,8	0,18	71,32	73,54	84,45	0,18	74,06	77,83	86,51	0,08	0,04
227,0	375,0	2,0	0,5	3,4	217,8	70,2	78,7	305,3	386,9	195,1	197,2	548,3	0,18	71,27	73,57	83,87	0,18	74,02	77,82	86,01	0,07	0,04
228,0	376,0	2,0	0,5	3,3	217,2	69,8	78,9	304,1	386,3	194,7	196,6	547,8	0,18	71,27	73,58	83,32	0,18	74,04	77,77	85,49	0,08	0,04
229,0	377,0	2,0	0,5	3,3	216,5	69,9	79,3	303,8	385,7	194,4	196,0	547,2	0,18	71,26	73,66	82,83	0,18	74,08	77,78	85,00	0,08	0,04
230,0	378,0	1,9	0,5	3,3	216,2	70,2	79,1	303,0	385,3	194,1	195,5	546,6	0,18	71,27	73,74	82,38	0,18	74,13	77,81	84,54	0,08	0,04
231,0	379,0	1,9	0,5	3,3	216,0	69,9	79,1	301,9	384,7	193,8	194,9	546,1	0,18	71,27	73,69	81,94	0,18	74,04	77,79	84,06	0,08	0,04
232,0	380,0	1,9	0,5	3,3	215,7	69,9	78,7	301,1	384,1	193,4	194,4	545,5	0,18	71,27	73,66	81,86	0,18	74,08	77,81	83,66	0,07	0,04
233,0	381,0	1,9	0,5	3,3	214,8	70,1	78,9	300,7	383,7	193,1	193,9	544,9	0,18	71,23	73,53	84,40	0,18	74,04	77,78	83,22	0,08	0,04
234,0	382,0	1,9	0,5	3,3	214,4	70,1	78,7	299,9	383,3	192,7	193,4	544,3	0,18	71,21	73,49	86,10	0,18	74,01	77,77	82,78	0,08	0,04
235,0	383,0	1,9	0,5	3,3	213,9	70,0	78,4	298,5	382,9	192,3	192,8	543,7	0,18	71,16	73,40	85,67	0,18	73,90	77,73	83,57	0,08	0,04
236,0	384,0	1,9	0,5	3,3	214,1	69,8	78,7	297,9	382,6	192,0	192,3	543,1	0,18	71,16	73,36	85,02	0,18	73,84	77,71	85,67	0,08	0,04
237,0	385,0	1,9	0,5	3,3	213,5	70,0	78,7	298,0	382,1	191,8	191,8	542,5	0,18	71,15	73,28	84,44	0,18	73,80	77,66	86,83	0,08	0,04
238,0	386,0	1,8	0,5	3,3	213,0	69,9	78,6	297,5	381,7	191,4	191,2	541,9	0,18	71,16	73,29	83,87	0,18	73,82	77,70	86,56	0,08	0,04
239,0	387,0	1,8	0,5	3,3	212,5	70,0	78,5	296,6	381,5	191,1	190,7	541,4	0,18	71,18	73,32	83,36	0,18	73,91	77,68	86,08	0,08	0,04
240,0	388,0	1,8	0,5	3,3	211,9	69,9	78,6	296,0	381,2	190,9	190,2	540,8	0,18	71,18	73,34	82,90	0,18	73,90	77,71	85,59	0,07	0,04
241,0	389,0	1,8	0,5	3,3	211,7	69,8	78,3	294,7	380,9	190,5	189,7	540,2	0,18	71,18	73,33	82,41	0,18	73,90	77,66	85,10	0,08	0,04
242,0	390,0	1,8	0,5	3,2	211,1	69,9	78,3	293,8	380,6	190,2	189,2	539,7	0,18	71,17	73,40	81,95	0,18	73,88	77,63	84,64	0,08	0,04
243,0	391,0	1,8	0,5	3,3	210,7	69,8	78,0	292,7	380,4	189,8	188,6	539,1	0,18	71,16	73,39	82,09	0,18	73,87	77,60	84,15	0,07	0,04
244,0	392,0	1,8	0,5	3,2	210,1	69,7	77,9	291,6	380,1	189,6	188,1	538,6	0,18	71,14	73,31	84,63	0,18	73,81	77,52	83,67	0,08	0,04
245,0	393,0	1,8	0,5	3,2	209,5	69,6	78,2	290,9	379,9	189,2	187,6	538,1	0,18	71,14	73,30	85,89	0,18	73,82	77,47	83,20	0,08	0,04
246,0	394,0	1,8	0,5	3,1	209,5	69,6	78,3	290,3	379,6	188,8	187,1	537,5	0,18	71,12	73,33	85,37	0,18	73,82	77,43	82,98	0,07	0,04
247,0	395,0	1,8	0,5	3,1	208,6	69,8	78,1	289,5	379,3	188,6	186,6	537,0	0,18	71,11	73,28	84,77	0,18	73,80	77,40	84,89	0,08	0,04
248,0	396,0	1,7	0,5	3,1	208,5	69,8	77,7	288,8	378,9	188,2	186,1	536,4	0,18	71,08	73,20	84,19	0,18	73,73	77,34	86,77	0,08	0,04
249,0	397,0	1,7	0,5	3,1	208,1	69,9	77,3	287,9	378,5	188,2	185,7	536,0	0,18	71,07	73,28	83,64	0,18	73,76	77,37	86,84	0,08	0,04
250,0	398,0	1,7	0,5	3,1	207,1	69,9	77,6	287,5	378,2	187,9	185,2	535,5	0,18	71,08	73,41	83,12	0,18	73,76	77,40	86,36	0,07	0,04
251,0	399,0	1,7	0,5	3,1	206,5	70,0	77,9	286,0	377,8	187,6	184,6	534,9	0,18	71,12	73,45	82,62	0,18	73,79	77,43	85,85	0,07	0,04
252,0	400,0	1,7	0,5	3,1	206,0	69,7	77,4	285,6	377,4	187,4	184,2	534,4	0,18	71,12	73,54	82,15	0,18	73,83	77,46	85,31	0,08	0,04
253,0	401,0	1,7	0,5	3,1	206,1	69,9	77,5	284,9	377,1	187,1	183,6	533,8	0,18	71,12	73,49	81,67	0,18	73,78	77,41	84,82	0,08	0,04
254,0	402,0	1,7	0,5	3,1	205,2	70,0	77,5	283,7	376,8	186,9	183,1	533,3	0,18	71,08	73,51	83,10	0,18	73,78	77,39	84,30	0,08	0,04
255,0	403,0	1,6	0,5	3,1	204,6	70,0	77,6	283,6	376,7	186,6	182,6	532,7	0,18	71,08	73,38	85,55	0,18	73,78	77,46	83,78	0,07	0,04
256,0	404,0	1,7	0,5	3,1	204,1	70,0	77,6	282,6	376,3	186,1	182,1	532,2	0,18	71,13	73,38	85,93	0,18	73,84	77,53	83,29	0,07	0,04
257,0	405,0	1,6	0,5	3,1	203,8	70,1	77,4	281,3	376,1	185,9	181,6	531,6	0,18	71,14	73,45	85,37	0,18	73,92	77,54	82,88	0,07	0,04
258,0	406,0	1,6	0,5	3,1	203,5	69,8	77,1	281,0	375,9	185,6	181,1	531,1	0,18	71,07	73,43	84,72	0,18	73,84	77,51	83,35	0,07	0,04
259,0	407,0	1,6	0,5	3,1	203,5	69,8	77,4	280,4	375,7	185,2	180,6	530,5	0,18	71,06	73,38	84,11	0,18	73,78	77,41	85,09	0,07	0,04
260,0	408,0	1,6	0,5	3,1	203,2	69,7	77,3	279,6	375,7	184,8	180,1	530,0	0,18	71,03	73,26	83,56	0,18	73,73	77,38	86,77	0,08	0,04
261,0	409,0	1,6	0,5	3,1	202,5	69,8	77,9	278,6	375,6	184,4	179,6	529,5	0,18	71,03	73,24	83,07	0,18	73,71	77,45	86,80	0,07	0,04
262,0	410,0	1,6	0,5	3,0	202,0	69,8	77,7	277,6	375,5	184,1	179,1	529,0	0,18	71,00	73,17	82,59	0,18	73,69	77,48	86,40	0,07	0,04
263,0	411,0	1,6	0,5	3,0	201,8	69,8	77,6	277,5	375,4	183,8	178,6	528,5	0,18	71,00	73,16	82,16	0,18	73,73	77,56	85,88	0,08	0,04
264,0	412,0	1,6	0,5	3,1	201,4	69,6	77,4	276,0	375,2	183,4	178,2	528,0	0,18	70,99	73,14	81,71	0,18	73,74	77,57	85,40	0,07	0,04
265,0	413,0	1,6	0,5	3,1	201,0	69,7	77,2	275,4	375,1	183,3	177,7	527,5	0,18	70,95	73,11	83,51	0,18	73,70	77,55	84,83	0,08	0,04
266,0	414,0	1,6	0,5	3,1	200,4	69,6	77,5	275,8	375,1	182,9	177,3	527,0	0,18	70,92	73,05	85,81	0,18	73,66	77,52	84,31	0,08	0,04
267,0	415,0	1,5	0,5	3,0	200,4	69,7	77,3	274,5	375,0	182,4	176,8	526,6	0,18	70,91	73,02	85,78	0,18	73,66	77,54	83,80	0,07	0,04
268,0	416,0	1,5	0,5	3,0	200,0	69,7	76,8	274,2	374,9	182,2	176,3	526,1	0,18	70,94	73,00	85,19	0,18	73,78	77,58	83,35	0,08	0,04
269,0	417,0	1,5	0,5	3,0	199,5	69,8	77,5	273,5	375,0	181,9	175,8	525,6	0,18	70,95	72,91	84,62	0,18	73,71	77,64	82,94	0,07	0,04
270,0	418,0	1,5	0,5	3,0	199,1	69,9	77,2	273,3	374,9	181,6	175,5	525,2	0,18	70,91	72,84	84,02	0,18	73,64	77,65	83,11	0,08	0,04
271,0	419,0	1,5	0,5	3,0	198,8	69,8	77,1	272,3	374,8	181,4	175,0	524,7	0,18	70,91	72,80	83,50	0,18	73,62	77,70	84,84	0,07	0,04
272,0	420,0	1,5	0,5	3,0	198,3	69,7	77,2	271,2	374,8	181,1	174,6	524,3	0,18	70,90	72,76	82,94	0,18	73,55	77,64	86,30	0,07	0,04
273,0	421,0	1,5	0,5	3,0	198,2	69,7	77,0	270,7	374,8	180,9	174,2	523,8	0,18	70,90	72,72	82,43	0,18	73,62	77,65	86,72	0,08	0,04

274,0	422,0	1,4	0,5	3,0	197,9	69,7	77,1	269,9	374,8	180,6	173,8	523,4	0,18	70,92	72,72	81,99	0,18	73,58	77,59	86,34	0,08	0,04
275,0	423,0	1,5	0,5	3,0	197,4	69,8	77,0	269,4	374,9	180,3	173,4	523,0	0,18	70,93	72,74	81,75	0,18	73,61	77,55	85,87	0,07	0,04
276,0	424,0	1,4	0,5	3,0	196,9	69,8	77,0	269,4	374,9	180,0	173,0	522,6	0,18	70,90	72,67	84,05	0,18	73,54	77,50	85,35	0,07	0,04
277,0	425,0	1,4	0,5	3,0	196,9	69,9	77,2	269,3	374,8	179,7	172,5	522,1	0,18	70,93	72,60	85,85	0,18	73,51	77,47	84,80	0,08	0,04
278,0	426,0	1,4	0,5	3,0	196,4	69,9	77,1	268,7	374,7	179,4	172,0	521,8	0,18	70,98	72,63	85,51	0,18	73,61	77,52	84,31	0,08	0,04
279,0	427,0	1,4	0,5	3,0	196,3	70,0	77,1	267,5	374,8	179,2	171,7	521,4	0,18	70,96	72,73	84,87	0,18	73,62	77,51	83,82	0,07	0,04
280,0	428,0	1,4	0,5	3,0	196,1	69,8	77,0	267,6	374,8	178,9	171,2	521,0	0,18	70,90	72,78	84,26	0,18	73,57	77,43	83,32	0,07	0,04
281,0	429,0	1,4	0,5	3,0	195,7	69,7	77,0	266,8	374,7	178,7	170,8	520,6	0,18	70,89	72,77	83,69	0,18	73,53	77,34	82,86	0,08	0,04
282,0	430,0	1,4	0,5	3,0	195,5	69,8	77,0	266,2	374,8	178,5	170,5	520,3	0,18	70,85	72,78	83,14	0,18	73,53	77,29	82,90	0,08	0,04
283,0	431,0	1,3	0,5	3,0	195,4	69,9	76,6	265,2	375,0	178,3	170,1	519,9	0,18	70,85	72,77	82,62	0,18	73,52	77,26	84,73	0,08	0,04
284,0	432,0	1,3	0,5	3,0	195,2	69,8	76,9	265,3	375,1	178,1	169,6	519,6	0,18	70,83	72,71	82,17	0,18	73,57	77,33	86,35	0,07	0,04
285,0	433,0	1,3	0,5	3,0	195,2	69,5	76,7	265,0	375,2	178,0	169,4	519,1	0,18	70,78	72,76	81,71	0,18	73,53	77,40	86,76	0,08	0,04
286,0	434,0	1,3	0,5	3,0	195,1	68,6	76,3	264,8	375,2	177,7	168,9	518,7	0,18	70,52	72,68	83,03	0,18	73,35	77,45	86,32	0,08	0,04
287,0	435,0	1,3	0,5	3,0	194,8	69,3	76,5	264,7	375,5	177,4	168,4	518,4	0,18	70,24	72,58	85,28	0,18	73,16	77,44	85,72	0,07	0,04
288,0	436,0	1,3	0,5	3,0	194,3	68,3	75,4	263,7	375,7	177,2	168,0	518,0	0,18	69,96	72,57	85,71	0,18	72,98	77,41	85,14	0,08	0,04
289,0	437,0	1,3	0,5	3,0	194,0	68,6	76,5	263,6	376,2	176,9	167,7	517,7	0,18	69,76	72,45	85,13	0,18	73,06	77,32	84,61	0,08	0,04
290,0	438,0	1,3	0,5	3,0	193,6	68,8	78,4	263,1	376,6	176,8	167,3	517,2	0,18	69,93	72,56	84,57	0,18	73,11	77,34	84,10	0,07	0,04
291,0	439,0	1,3	0,5	3,0	192,7	69,4	80,6	263,2	377,1	176,4	167,0	516,9	0,18	70,10	72,66	83,97	0,18	73,20	77,37	83,56	0,07	0,04
292,0	440,0	1,3	0,5	3,0	192,3	69,3	81,7	263,2	377,4	176,2	166,8	516,5	0,18	70,41	72,84	83,47	0,18	73,46	77,39	83,15	0,08	0,03
293,0	441,0	1,3	0,5	3,0	192,1	69,8	83,4	263,1	377,8	176,1	166,5	516,2	0,18	70,53	72,83	83,00	0,18	73,50	77,41	82,72	0,07	0,03
294,0	442,0	1,2	0,5	3,1	191,7	69,8	84,1	262,5	378,3	175,9	166,2	515,9	0,18	70,68	72,88	82,54	0,18	73,57	77,43	84,15	0,07	0,03
295,0	443,0	1,3	0,5	3,1	191,7	70,0	85,1	262,0	378,7	175,7	166,0	515,5	0,18	70,80	72,81	82,11	0,18	73,54	77,37	86,33	0,07	0,03
296,0	444,0	1,2	0,5	3,1	191,6	70,1	86,2	262,0	379,3	175,6	165,7	515,3	0,18	70,86	72,76	81,71	0,18	73,50	77,36	86,89	0,07	0,03
297,0	445,0	1,2	0,5	3,1	191,3	70,3	87,4	261,7	379,8	175,3	165,5	515,0	0,18	70,89	72,72	83,77	0,18	73,49	77,38	86,54	0,08	0,03
298,0	446,0	1,2	0,5	3,1	191,2	70,2	86,0	261,3	380,4	175,2	165,3	514,8	0,18	70,95	72,76	86,26	0,18	73,55	77,40	86,11	0,07	0,03
299,0	447,0	1,2	0,5	3,2	191,4	70,4	84,3	260,9	380,9	174,9	165,1	514,6	0,18	71,06	72,85	86,03	0,18	73,71	77,44	85,63	0,08	0,03
300,0	448,0	1,2	0,5	3,2	191,4	70,2	83,0	261,0	381,4	174,8	164,9	514,4	0,18	71,12	72,87	85,44	0,18	73,75	77,46	85,15	0,08	0,03
301,0	449,0	1,2	0,5	3,2	191,7	70,2	82,1	260,7	381,9	174,6	164,6	514,1	0,18	71,16	72,98	84,88	0,18	73,75	77,48	84,76	0,08	0,03
302,0	450,0	1,2	0,5	3,2	192,0	70,3	81,7	260,7	382,3	174,5	164,5	513,9	0,18	71,23	73,14	84,36	0,18	73,84	77,51	84,32	0,07	0,03
303,0	451,0	1,1	0,5	3,2	191,9	70,4	81,2	260,4	382,8	174,3	164,3	513,7	0,18	71,30	73,16	83,89	0,18	73,89	77,59	83,91	0,08	0,04
304,0	452,0	1,2	0,5	3,2	191,9	70,4	80,7	260,4	383,3	174,1	164,1	513,5	0,18	71,29	73,14	83,41	0,18	73,83	77,64	83,51	0,08	0,04
305,0	453,0	1,1	0,5	3,2	191,9	70,4	80,2	259,7	383,7	174,0	163,9	513,4	0,18	71,28	73,08	82,99	0,18	73,84	77,66	83,14	0,08	0,04
306,0	454,0	1,1	0,5	3,2	191,9	70,4	79,9	259,4	384,0	173,7	163,7	513,2	0,18	71,26	73,11	82,51	0,18	73,82	77,65	83,04	0,08	0,04
307,0	455,0	1,1	0,5	3,2	191,9	70,5	79,8	259,7	384,5	173,7	163,5	513,0	0,18	71,27	73,03	82,11	0,18	73,82	77,64	85,06	0,07	0,03
308,0	456,0	1,1	0,5	3,2	191,9	70,2	79,8	259,4	385,0	173,4	163,3	512,8	0,18	71,32	72,94	81,66	0,18	73,82	77,70	86,86	0,07	0,03
309,0	457,0	1,1	0,5	3,2	191,8	70,4	79,2	259,1	385,4	173,3	163,2	512,7	0,18	71,32	72,90	83,47	0,18	73,81	77,75	86,87	0,07	0,04
310,0	458,0	1,1	0,5	3,2	191,6	70,3	79,3	259,4	386,1	173,2	163,0	512,5	0,18	71,34	72,92	85,89	0,18	73,87	77,79	86,41	0,08	0,04
311,0	459,0	1,1	0,5	3,2	191,7	70,5	79,2	258,8	386,9	173,1	162,9	512,4	0,18	71,33	72,90	85,87	0,18	73,86	77,79	85,93	0,08	0,04
312,0	460,0	1,1	0,5	3,2	191,7	70,1	79,3	258,8	387,7	172,9	162,7	512,3	0,18	71,28	72,90	85,27	0,18	73,84	77,75	85,47	0,08	0,04
313,0	461,0	1,1	0,5	3,2	191,6	70,2	79,1	258,9	388,6	172,7	162,4	512,2	0,18	71,35	72,98	84,72	0,18	73,97	77,73	84,99	0,08	0,04
314,0	462,0	1,0	0,5	3,2	192,0	70,2	78,9	259,3	389,2	172,6	162,3	512,1	0,18	71,38	73,04	84,20	0,18	74,06	77,74	84,53	0,08	0,04
315,0	463,0	1,0	0,5	3,2	191,9	70,4	78,9	258,9	389,8	172,5	162,2	512,0	0,18	71,40	73,05	83,70	0,18	74,04	77,75	84,07	0,08	0,04
316,0	464,0	1,0	0,5	3,2	192,0	70,5	78,9	258,8	390,6	172,5	162,0	511,8	0,18	71,41	73,09	83,22	0,18	74,02	77,75	83,62	0,07	0,04
317,0	465,0	1,0	0,6	3,2	192,0	70,5	78,6	258,9	391,4	172,4	161,9	511,7	0,18	71,40	73,09	82,76	0,18	74,01	77,79	83,21	0,08	0,04
318,0	466,0	1,0	0,6	3,2	192,2	70,3	78,6	258,5	392,1	172,3	161,7	511,7	0,18	71,40	73,09	82,30	0,18	74,02	77,82	82,78	0,07	0,04
319,0	467,0	1,0	0,6	3,2	192,4	70,3	78,6	258,8	393,0	172,0	161,6	511,6	0,18	71,38	73,20	81,87	0,18	74,08	77,81	83,82	0,08	0,04
320,0	468,0	1,0	0,6	3,2	192,1	70,4	78,1	258,1	393,7	172,0	161,5	511,5	0,18	71,33	73,10	82,52	0,18	74,00	77,86	85,84	0,08	0,04
321,0	469,0	1,0	0,6	3,2	192,0	70,5	78,3	258,2	394,5	171,9	161,4	511,5	0,18	71,31	73,05	85,17	0,18	73,92	77,94	86,75	0,07	0,04
322,0	470,0	1,0	0,6	3,2	192,2	70,4	78,5	258,5	395,3	171,8	161,3	511,5	0,18	71,30	72,98	85,99	0,18	73,90	77,95	86,41	0,08	0,04
323,0	471,0	0,9	0,6	3,2	192,4	70,4	78,4	258,9	396,1	171,7	161,2	511,4	0,18	71,30	72,95	85,46	0,18	73,92	77,91	85,95	0,07	0,04
324,0	472,0	1,0	0,6	3,2	192,4	70,2	78,3	258,8	396,9	171,7	161,0	511,4	0,18	71,31	72,98	84,92	0,18	73,99	77,91	85,48	0,08	0,04
325,0	473,0	1,0	0,6	3,2	192,5	70,3	78,3	259,0	397,6	171,6	161,0	511,3	0,18	71,36	73,13	84,34	0,18	74,03	77,88	85,00	0,07	0,04
326,0	474,0	0,9	0,6	3,2	192,5	70,5	78,6	258,9	398,3	171,4	160,9	511,2	0,18	71,42	73,12	83,85	0,18	74,09	77,92	84,53	0,08	0,04
327,0	475,0	0,9	0,6	3,2	192,8	70,4	78,4	258,9	399,0	171,4	160,8	511,1	0,18	71,44	73,07	83,34	0,18	74,04	77,90	84,05	0,08	0,04
328,0	476,0	0,9	0,6	3,3	193,0	70,3	78,6	258,6	399,6	171,3	160,7	511,0	0,18	71,39	73,02	82,82	0,18	74,00	77,85	83,58	0,08	0,04
329,0	477,0	0,9	0,6	3,3	193,0	70,4	78,5	258,7	400,2	171,1	160,6	511,0	0,18	71,41	73,05	82,37	0,18	73,94	77,83	83,18	0,07	0,04
330,0	478,0	0,9	0,6	3,3	192,9	70,4	78,2	258,6	400,8	171,0	160,5	510,9	0,18	71,41	73,21	81,93	0,18	74,02	77,87	82,82	0,08	0,04
331,0	479,0	0,9	0,6	3,2	192,9	70,5	77,9	258,9	401,4	170,8	160,5	510,9	0,18	71,50	73,30	81,91	0,18	74,21	77,87	84,53	0,07	0,04
332,0	480,0	0,8	0,6	3,3	193,0	70,3	78,0	258,7	402,0	170,7	160,4	510,8	0,18	71,52	73,26	84,55	0,18	74,17	77,88	86,55	0,08	0,04
333,0	481,0	0,8	0,6	3,3	193,0	70,5	78,0	259,2	402,6	170,7	160,3	510,7	0,18	71,54	73,24	86,09	0,18	74,16	77,88	86,67	0,08	0,04
334,0	482,0	0,8	0,6	3,3	192,9	70,6	78,2	259,2	403,2	170,6	160,2	510,7	0,18	71,61	73,30	85,65	0,18	74,32	77,90	86,19	0,08	0,04
335,0	483,0	0,8	0,6	3,3	192,8	70,3	78,3	259,1	403,8	170,4	160,3	510,6	0,18	71,60	73,31	85,08	0,18	74,30	77,89	85,70	0,08	0,04
336,0	484,0	0,8	0,6	3,3	193,1	70,5	78,5	259,3	404,2	170,5	160,2	510,6	0,18	71,56	73,28	84,56	0,18	74,28	77,88	85,21	0,07	0,04
337,0	485,0	0,8	0,6	3,3	193,2	70,6	78,4	259,7	404,8	170,3	160,1	510,5	0,18	71,68	73,42	84,01	0,18	74,61	77,95	84,69	0,07	0,04
338,0	486,0	0,8	0,6	3,3	193,2	70,7	77,7	259,1	405,5	170,3	160,1	510,4	0,18	71,69	73,47	83,53	0,18	74,74	77,97	84,21	0,07	0,04
339,0	487,0	0,8	0,6	3,3	193,3	70,6	78,0	260,0	405,7	170,2	160,2	510,4	0,18	71,65	73,50	83,08	0,18	74,69	78,00	83,75	0,08	0,04
340,0	488,0	0,7	0,6	3,3	193,2	70,5	78,1	260,0	406,2	170,2	160,1	510,3	0,18	71,58	73,57	82,63	0,18	74,58	78,01	83,35	0,08	0,04
341,0	489,0	0,8	0,6	3,3	193,1	70,5	78,0	260,0	406,7	170,2	160,0	510,2	0,18	71,64	73,63	82,18	0,18	74,73	77,98	82,88	0,08	0,04
342,0	490,0	0,7	0,6	3,3	193,3	70,4	77,7	260,3	406,9	170,1	160,0	510,1	0,18	71,74	73,66	81,71	0,18	74,91	77,98	84,34	0,08	0,04
343,0	491,0	0,7	0,6	3,3	193,2	70,5	77,7	260,2	407,2	170,1	160,0	509,9	0,18	71,67	73,52	83,59	0,18	74,69	78,02	86,37	0,08	0,04
344,0	492,0	0,7	0,6	3,3	193,4	70,3	77,7	260,6	407,5	170,0	160,0	509,8	0,18	71,61	73,39	85,95	0,18	74,49	78,07	86,57	0,08	0,04
345,0	493,0	0,7	0,6	3,3	193,7	70,4	78,2	260,5	407,8	169,9	160,0	509,8	0,18	71,53	73,38	85,87	0,18	74,39	78,12	86,15	0,08	0,04
346,0	494,0	0,7	0,6	3,3	193,6	70,5	78,3	260,4	407,8	169,8	160,0	509,7	0,18	71,51	73,45	85,27	0,18	74,35	78,10	85,67	0,08	0,04
347,0	495,0	0,7	0,6	3,3	194,0	70,4	78,1	260,1	407,9	169,7	160,0	509,6	0,18	71,47	73,50	84,65	0,18	74,29	78,04	85,16	0,07	0,04
348,0	496,0	0,7	0,6	3,3	194,0	70,4	77,9	260,0	407,9	169,7	160,0	509,5	0,18	71,47	73,49	84,05	0,18	74,30	77,98	84,70	0,07	0,04
349,0	497,0	0,7	0,6	3,3	194,0	70,5	78,0	260,7	408,0	169,7	159,9	509,4	0,18	71,46	73,50	83,53	0,18	74,33	77,99	84,21	0,07	0,04
350,0	498,0	0,7	0,6	3,3	194,0	70,5	78,7	260,7	408,3	169,6	160,1	509,3	0,18	71,55	73,48	83,09	0,18	74,59	77,93	83,79	0,08	0,04
351,0	499,0	0,6	0,6	3,3	193,9	70,6	80,6	261,1	408,2	169,6	160,1	509,1	0,18	71,64	73,59	82,65	0,18	74,72	77,95	83,33	0,08	0,04
352,0	500,0	0,6	0,6	3,3	193,5	70,8	82,1	261,6	408,3	169,7	160,2	508,9	0,18	71,71	73,73	82,27	0,18	74,79	77,98	82,94	0,07	0,04
353,0	501,0	0,6	0,6	3,3	193,4	70,9	83,9	261,7	408,4	169,6	160,3	508,7	0,18	71,82	73,79	81,85	0,18	74,89	78,02	83,18	0,08	0,03
354,0	502,0	0,6	0,6	3,3	193,0	70,7	84,0	261,6	408,5	169,6	160,2	508,5	0,18	71,78	73,66	82,33	0,18	74,72	78,08	85,48	0,08	0,03
355,0	503,0	0,6	0,6	3,3	193,3	70,8	82,8	261,6	408,7	169,6	160,3	508,4	0,18	71,74	73,60	85,31	0,18	74,70	78,08	86,92	0,08	0,04
356,0	504,0	0,6	0,6	3,3	193,3	71,1	82,0	261,2	408,6	169,7	160,3	508,2	0,18	71,88	73,68	86,25	0,18	74,88	78,10	86,69	0,08	0,03
357,0	505,0	0,6	0,6	3,3	193,7	70,8	81,5	261,5	408,8	169,7	160,4	507,9	0,18	71,89	73,75	85,76	0,18	74,83	78,12	86,28	0,08	0,04
358,0	506,0	0,6	0,6	3,3	193,6	70,7	81,0	261,8	408,9	169,7	160,4	507,7	0,18	71,91	73,83	85,18	0,18	74,87	78,13	85,74	0,07	0,04
359,0	507,0	0,6	0,6	3,3	194,2	70,7	80,9	262,0	408,9	169,6	160,4	507,4	0,18	71,87	73,80	84,63	0,18	74,78	78,19	85,28	0,08	0,04
360,0	508,0	0,5	0,6	3,3	194,2	70,7	80,6	262,2	409,1	169,6	160,4	507,2	0,18	71,80	73,78	84,12	0,18	74,67	78,21	84,84	0,08	0,04
361,0	509,0	0,5	0,6	3,3	195,0	70,6	80,1	262,3	409,0	169,6	160,4	507,0	0,18	71,79	73,79	83,64	0,18	74,58	78,18	84,42	0,07	0,04
362,0	510,0	0,5	0,6	3,3	194,9	70,7	80,0	262,1	409,0	169,5	160,5	506,7	0,18	71,74	73,71	83,21	0,18	74,51	78,21	83,98	0,08	0,04
363,0	511,0	0,5	0,6	3,3	195,1	70,7	79,8	262,0	408,9	169,4	160,5	506,5	0,18	71,74	73,66	82,75	0,18	74,41	78,20	83,53	0,07	0,04
364,0	512,0	0,5	0,6	3,3	194,9	70,6	79,6	262,2	408,8	169,5	160,5	506,3	0,18	71,70	73,66	82,36	0,18	74,43	78,17	83,13	0,08	0,04
365,0	513,0	0,5	0,6	3,3	195,2	70,6	79,4	262,8	408,7	169,5	160,6	506,1	0,18	71,70	73,66	81,95	0,18	74,45	78,18	82,73	0,08	0,04
366,0	514,0	0,5	0,6	3,3	195,3	70,9	79,3	262,8	408,4	169,4	160,6	505,9	0,18	71,78	73,71	81,73	0,18	74,51	78,17	84,17	0,08	0,04

367,0	515,0	0,5	0,6	3,3	195,1	70,7	78,9	262,1	408,4	169,5	160,7	505,6	0,18	71,77	73,70	83,96	0,18	74,44	78,13	86,23	0,08	0,04
368,0	516,0	0,4	0,6	3,3	195,1	70,8	78,9	262,6	408,3	169,7	160,7	505,4	0,18	71,76	73,60	86,10	0,18	74,38	78,07	86,88	0,08	0,04
369,0	517,0	0,4	0,6	3,3	195,6	70,6	79,1	262,3	408,3	169,6	160,7	505,2	0,18	71,72	73,52	85,90	0,18	74,32	78,08	86,48	0,08	0,04
370,0	518,0	0,4	0,6	3,3	195,7	70,7	79,1	262,4	408,3	169,5	160,7	504,9	0,18	71,67	73,47	85,33	0,18	74,28	78,08	86,05	0,08	0,04
371,0	519,0	0,4	0,6	3,3	195,7	70,6	79,1	262,9	408,4	169,6	160,7	504,7	0,18	71,61	73,44	84,77	0,18	74,27	78,06	85,56	0,07	0,04
372,0	520,0	0,4	0,6	3,3	195,7	70,6	79,2	262,3	408,4	169,4	160,7	504,5	0,18	71,58	73,40	84,23	0,18	74,22	78,01	85,07	0,08	0,04
373,0	521,0	0,4	0,6	3,3	196,1	70,6	78,7	262,0	408,3	169,5	160,7	504,3	0,18	71,57	73,36	83,74	0,18	74,17	78,04	84,63	0,08	0,04
374,0	522,0	0,4	0,6	3,3	196,2	70,5	79,0	262,5	408,4	169,5	160,8	504,1	0,18	71,54	73,33	83,25	0,18	74,17	78,00	84,16	0,08	0,04
375,0	523,0	0,4	0,6	3,3	196,2	70,5	79,0	262,5	408,4	169,5	160,8	503,9	0,18	71,52	73,31	82,79	0,18	74,13	77,96	83,71	0,08	0,04
376,0	524,0	0,4	0,6	3,3	196,2	70,5	78,7	262,6	408,5	169,4	160,7	503,7	0,18	71,50	73,27	82,36	0,18	74,09	77,97	83,26	0,08	0,04
377,0	525,0	0,4	0,6	3,3	196,5	70,5	78,8	262,5	408,6	169,4	160,8	503,5	0,18	71,50	73,22	81,95	0,18	74,04	77,97	82,84	0,08	0,04
378,0	526,0	0,4	0,6	3,3	196,5	70,5	78,6	262,5	408,9	169,4	160,8	503,2	0,18	71,48	73,20	81,81	0,18	74,02	77,98	83,36	0,08	0,04
379,0	527,0	0,3	0,6	3,3	196,3	70,6	78,2	263,3	409,0	169,4	160,8	503,0	0,18	71,45	73,12	84,26	0,18	73,92	77,95	85,44	0,08	0,04
380,0	528,0	0,3	0,6	3,3	196,5	70,4	78,1	263,5	409,2	169,5	160,7	502,9	0,18	71,42	73,07	86,09	0,18	73,91	77,99	86,89	0,08	0,04
381,0	529,0	0,3	0,6	3,3	196,6	70,4	78,5	263,4	409,3	169,5	160,8	502,7	0,18	71,40	73,09	85,77	0,18	73,97	78,00	86,70	0,08	0,04
382,0	530,0	0,3	0,7	3,3	196,7	70,5	78,5	263,5	409,2	169,4	160,8	502,5	0,18	71,41	73,08	85,19	0,18	73,97	78,02	86,23	0,08	0,04
383,0	531,0	0,3	0,6	3,3	196,8	70,5	78,5	264,1	409,1	169,6	160,8	502,3	0,18	71,42	73,08	84,60	0,18	73,96	78,00	85,71	0,08	0,04
384,0	532,0	0,3	0,6	3,3	197,1	70,5	78,4	264,1	408,9	169,5	160,7	502,1	0,18	71,44	73,10	84,10	0,18	73,95	78,00	85,25	0,07	0,04
385,0	533,0	0,3	0,6	3,3	197,1	70,5	78,6	264,5	408,8	169,5	160,7	502,0	0,18	71,44	73,13	83,61	0,18	73,96	77,99	84,79	0,08	0,04
386,0	534,0	0,2	0,6	3,3	196,9	70,3	78,6	264,2	408,6	169,6	160,8	501,8	0,18	71,44	73,16	83,13	0,18	74,00	78,01	84,28	0,08	0,04
387,0	535,0	0,2	0,6	3,3	196,9	70,4	78,6	264,4	408,5	169,6	160,8	501,6	0,18	71,43	73,17	82,67	0,18	74,01	77,98	83,84	0,07	0,04
388,0	536,0	0,2	0,6	3,3	197,4	70,3	78,4	264,4	408,2	169,7	160,8	501,4	0,18	71,43	73,13	82,22	0,18	73,96	77,96	83,39	0,08	0,04
389,0	537,0	0,2	0,6	3,2	197,5	70,3	78,2	264,7	408,0	169,8	160,8	501,3	0,18	71,40	73,17	81,81	0,18	74,01	77,95	82,97	0,08	0,04
390,0	538,0	0,2	0,6	3,3	197,5	70,5	77,8	264,4	407,7	169,7	160,8	501,0	0,18	71,38	73,16	82,42	0,18	73,96	77,92	82,83	0,08	0,04
391,0	539,0	0,2	0,6	3,3	197,4	70,4	78,2	265,1	407,6	169,8	160,8	500,8	0,18	71,35	73,11	84,94	0,18	73,94	77,89	84,65	0,07	0,04
392,0	540,0	0,2	0,6	3,2	197,1	70,4	78,1	264,8	407,4	169,8	160,8	500,6	0,18	71,33	73,04	85,99	0,18	73,88	77,86	86,54	0,07	0,04
393,0	541,0	0,2	0,6	3,2	196,9	70,3	78,2	264,8	407,2	169,7	160,7	500,4	0,18	71,32	73,05	85,49	0,18	73,87	77,85	86,91	0,08	0,04
394,0	542,0	0,2	0,6	3,2	197,2	70,3	78,3	264,3	407,2	169,9	160,7	500,2	0,18	71,35	73,04	84,91	0,18	73,89	77,85	86,51	0,08	0,04
395,0	543,0	0,1	0,6	3,2	197,3	70,2	78,3	265,2	406,9	169,9	160,7	500,0	0,18	71,37	73,09	84,33	0,18	73,94	77,85	85,99	0,07	0,04
396,0	544,0	0,1	0,6	3,2	197,2	70,3	78,2	264,9	406,6	169,8	160,8	499,7	0,18	71,38	73,08	83,84	0,18	73,96	77,86	85,51	0,07	0,04
397,0	545,0	0,1	0,6	3,2	197,2	70,2	78,4	264,9	406,5	169,9	160,7	499,5	0,18	71,35	73,11	83,34	0,18	74,02	77,89	85,03	0,07	0,04
398,0	546,0	0,1	0,6	3,2	197,4	70,2	78,4	264,7	406,2	169,9	160,7	499,3	0,18	71,35	73,09	82,87	0,18	73,94	77,88	84,54	0,07	0,04
399,0	547,0	0,1	0,6	3,2	197,6	70,3	78,2	265,2	406,1	169,9	160,7	499,1	0,18	71,37	73,01	82,42	0,18	73,92	77,88	84,06	0,08	0,04
400,0	548,0	0,1	0,6	3,2	197,6	70,4	77,9	264,9	405,9	170,0	160,7	498,8	0,18	71,36	72,99	81,98	0,18	73,91	77,85	83,63	0,08	0,04
401,0	549,0	0,1	0,6	3,2	197,4	70,1	78,0	265,1	405,5	170,0	160,7	498,5	0,18	71,34	73,02	81,82	0,18	73,94	77,83	83,18	0,07	0,04
402,0	550,0	0,1	0,6	3,2	197,2	70,2	77,6	265,3	405,2	170,1	160,7	498,3	0,18	71,33	72,96	84,25	0,18	73,91	77,81	82,69	0,07	0,04
403,0	551,0	0,1	0,6	3,2	197,1	70,1	77,5	265,4	404,9	170,1	160,6	498,0	0,18	71,29	72,88	85,89	0,18	73,86	77,82	83,66	0,07	0,04
404,0	552,0	0,1	0,6	3,2	197,0	69,9	77,5	265,0	404,6	170,2	160,6	497,9	0,18	71,24	72,88	85,47	0,18	73,88	77,75	85,79	0,08	0,04
405,0	553,0	0,0	0,5	3,2	197,0	69,9	77,9	265,0	404,5	170,2	160,5	497,6	0,18	71,25	72,89	84,88	0,18	73,87	77,73	86,93	0,08	0,04

Manufacturer:	jotul
Model:	F 35
Run:	1
Project #:	pi 20250
Test Duration:	69 min

	HHV	LHV
Eff	67,85%	73,01%
Comb Eff	98,41%	98,41%
HT Eff	68,95%	74,19%
Output	62 663	kJ/h
Burn Rate	4,57	kg/h
Grams CO	130	g
Input	92 354	kJ/h
MC wet	17,15	

Note: In the “Input data”, "Calc. % O_2", "Fuel Properties", and “Mass Balance” columns, [e], [d], [g], [a]. [b], [c], [h], [u], [w], [j], and [k] refer to their respective variables in Clauses 13.7.3

	Ultimate CO_2
$CO_{2\text{-}ult}$	19,86
	F_0
	1,051

Overall Heating Efficiency:	67,85%	
Combustion Efficiency:	98,41%	
Heat Transfer Efficiency:	68,95%	

Air Fuel Ratio (A/F)	
Dry Molecular Weight (M_d)	30,19
Dry Moles Exhaust Gas (N_r):	323,97
Air Fuel Ratio (A/F)	9,27

Heat Output:	59 443	Btu/h	62 663	kJ/h
Heat Input:	87 608	Btu/h	92 354	kJ/h
Burn Duration:	1,15	h		
Burn Rate:	10,07	lb/h	4,570	kg/h
Stack Temp:	676,3	Deg. F	358,0	Deg. C

Manufacturer: jotul
Model: F 35

Run: 1
Project #: pi 20250
Test Duration: 405,00 min

	HHV	LHV
Eff	69,00%	74,24%
Comb Eff	95,75%	95,75%
HT Eff	72,06%	77,54%
Output	14 266	kJ/h
Burn Rate	1,02	kg/h
Grams CO	459	g
Input	20 676	kJ/h
MC wet	18,51	

Note: In the “Input data”, "Calc. % O_2", "Fuel Properties", and “Mass Balance” columns, [e], [d], [g], [a]. [b], [c], [h], [u], [w], [j], and [k] refer to their respective variables in Clauses 13.7.3

Ultimate CO_2
$CO_{2\text{-ult}}$ 19,86
F_0
1,047

Overall Heating Efficiency:	69,00%	
Combustion Efficiency:	95,75%	
Heat Transfer Efficiency:	72,06%	

Air Fuel Ratio (A/F)	
Dry Molecular Weight (M_d)	29,44
Dry Moles Exhaust Gas (N_r):	609,37
Air Fuel Ratio (A/F)	17,43

Heat Output:	13 533	Btu/h	14 266	kJ/h
Heat Input:	19 613	Btu/h	20 676	kJ/h
Burn Duration:	6,75	h		
Burn Rate:	2,26	lb/h	1,023	kg/h
Stack Temp:	291,4	Deg. F	144,1	Deg. C

POLYTESTS
TESTING THROUGH YOUR REALITY

Date: 2021-02-24 Manufacturer: Jotul Model: F 35
Project #: PI 20250 Run: 2 Tech: MM Reviewer: M

- kindling 74LBS START FIRE
- 1 min torche
- After 1 min close Door
- At 27LBS insert load
- close Door immedially
- At 300LBS insert load
- close Door immedially
- At 5 min close air inlet (1/2) HALF WAY (Medium setting)

TEST LOAD CONFIGURATION

POLYTESTS
TESTING THROUGH YOUR REALITY

PRE / POST CHECKS

Date: 2021-02-24 Manufacturer: Jotul Model: F35

Project #: pI 20250 Run: 2 Tech: MM Reviewer: SD

	Equipment #	Time	12%	22%
Moisture Meter Calibration Check:	EM-191	7:00	ok	ok

	Pre-Test	Post-Test
Facility Conditions:		
Air Velocity from less than 2 feet	0 (max50 Fpm)	0 (max50 Fpm)
Smoke Capture Check (Tunnel velocity)	0 k	NA
Picture	4 sides 0 k	0 k

Wood Heater Conditions:

Date Wood Heater Stack Cleaned	2021-02-23
Date Dilution Tunnel Cleaned	2021-02-23
Induced Draft Check (max 0.005 H2O)	ok
Traverse before ignition	ok

Temperature System:

Ambient (65°-90°F)	0 k °F

Proportional Checks:

Thermocouple check	ok
Pitot Clean	ok
Pitot verification	ok

POLYTESTS
TESTING THROUGH YOUR REALITY

SAMPLING EQUIPMENT CHECK OUT

Date: 2021-02-24 Manufacturer: Jofel Model: F35

Project #: PI 20250 Run: 2 Tech: MM Reviewer: DP

Leakage Checks Tunnel Samplers

High fire test	System 1st hour		System 1		System 2	
Unplugged Flow Rate = .25cfm	Pre-Test ASTM (-15) CSA B415 (-5)	Post-Test (max test)	Pre-Test ASTM (-15) CSA B415 (-5)	Post-Test (Max test)	Pre-Test ASTM (-15) CSA B415 (-5)	Post-Test (Max test)
Vacuum (inches Hg.)						
Final 1minute DGM (Liter)						
Initial 1minute DGM (Liter)						
Change © (Liter)						
Allowable leakage .04 x Sample rate or 0.28Lpm CSA B415 (0.56)						
Check OK						

Low medium fire test	System 1st hour		System 1		System 2	
Unplugged Flow Rate = .25cfm	Pre-Test ASTM (-15) CSA B415 (-5)	Post-Test (max test)	Pre-Test ASTM (-15) CSA B415 (-5)	Post-Test (Max test)	Pre-Test ASTM (-15) CSA B415 (-5)	Post-Test (Max test)
Vacuum (inches Hg.)	-15	-15	-15	-15	-15	-15
Final 1minute DGM (Liter)	384 969,35	386317,20	384969,75	386317,34	144703,78	146033,28
Initial 1minute DGM (Liter)	384 969,32	386317,16	384969,75	386317,28	144703,76	146033,28
Change © (Liter)	0,03	0,04	∅	0,06	0,02	∅
Allowable leakage .04 x Sample rate or 0.28Lpm CSA B415 (0.56)						
Check OK	ok	ok	ok	ok	ok	ok

POLYTESTS
TESTING THROUGH YOUR REALITY

SAMPLING EQUIPMENT CHECK OUT

Date: 2021-02-24 Manufacturer: Jofal Model: F35

Project #: pT 20250 Run: 2 Tech: MM Reviewer: DP

Leakage Checks Flue Gas Sampler

Plugged Probe	Pre-Test	Post Test
Vacuum (inches Hg.)	-5	-5
Rotameter Reading (mml/min.)	0	0
Flow Rate (lpm)	1.5	1.5
Allowable (.02 x Sample Rate)	30	30
Check OK	ok	ok

Leakage Checks Pitot

Plugged Probe	Pre-Test 3 H2o static	Pre-Test 0.4-0.5 H2o velocity	Post Test 3 H2o Static	Post Test 0.4-0.5 H2o velocity
Vacuum (inches Hg.)	3	.5	3	.4
Check OK (no change after 15 sec.)	ok	ok	ok	ok

POLYTESTS
TESTING THROUGH YOUR REALITY

PRE-TEST SCALE AUDIT

Date: 2021-02-24 Manufacturer: Jafel Model: F 35

Project #: pT 2250 Run: 2 Tech: MM Reviewer: DL

Scale Type	Audit		Measured Weight
	Equipment #	Weight	
Platform	EM-090	44 lbs, Class F	44 lbs
Wood	EM-090	440 lbs, Class F	440 lbs
Wood	EM-205	2200 lbs, Class F	2200 lbs
Analytical	EM-128	100 mg, Class S	100 mg
Analytical	EM-129	200 g, Class S	200 g

LIMITS OF WEIGHT RANGES

ANALYTICAL SCALE: ..... 50%-150% of dry filter weight, ± 0.1 mg
PLATFORM SCALE.....20%-80% of ideal test load weight, ± 0.1 lbs or 1%
WOOD SCALE.....20%-80% of ideal test load weight, ± 0.01 lbs or 1%

POLYTESTS
TESTING THROUGH YOUR REALITY

CONTINUOUS ANALYZERS

Date: 2021-02-24 Manufacturer: Jofvl Model: F 35

Project #: pJ 20250 Run: 2 Tech: M M Reviewer: D

FOR TUNNELS < 12 in

Barometric pressure (P_{bar}) 101.5 (KPa.) Static pressure (P_q) 0.18 (inches w.c.)
Inside diameter: Port A _____ Port B ____.
Tunnel cross sectional area: .1963Ft^2
Pitot tube type: Standard

Traverse Point	Position (inches)			Velocity Head Δ_p (inches H_2O)	Tunnel Temperature (°F)
	6 po	7 po	8 po		
A- Centroid	3.00	3.50	4	0.076	73.96
B - Centroid	3.00	3.50	4	0.075	73.54
A-1	0.40	0.50	0.50	0.062	73.96
A-2	1.50	1.75	2	0.065	73.77
A-3	4.50	5.25	6	0.069	73.77
A-4	5.60	6.5	7.5	0.062	73.68
B-1	0.40	0.50	0.50	0.062	73.54
B-2	1.50	1.75	2	0.06	73.51
B-3	4.50	5.25	6	0.074	73.51
B-4	5.60	6.5	7.5	0.065	73.35
				AVERAGE	

$$v_s = K_p C_p (\sqrt{\Delta p})_{avg} \sqrt{\frac{(T_s)_{avg}}{P_s M_s}}$$

Where,
C_p = pitot tube coefficient, dimension less = 0.99 for standard pitot.
Δ_p = manometer reading (inches H_2O)
T_s = average absolute dilution tunnel temperature (°F + 460)
P_s = absolute dilution tunnel gas pressure or $P_{bar} + P_{qg}$
P_q = static pressure $\frac{\text{in. } H_2O}{\{13.6\}}$
M_s = 28.56, wet molecular weight of stack gas (alternatively, it may be measured)
K_p = 85.49 pitot tube constant, (conversion factor for English units)

_$\Delta_p$avg. = average of the square roots of the velocity heads (Δ_p) measured at each traverse point.

POLYTESTS
TESTING THROUGH YOUR REALITY

CONTINUOUS ANALYZERS

Date: 2021-02-24 Manufacturer: Joful Model: F35

Project #: pI 20250 Run: 2 Tech: MM Reviewer: DP

Pre-Test (Adjust and Record)

	ZERO		SPAN		CAL. (Record Only)	
CO	0	0	2,979	3,000	1,009	1,000
Tolerance CO	0	+/- 0.02	0,21	+/- 0.15	0,009	+/- 0.05
CO_2	0	0	18,14	1800	983	1000
Tolerance CO2	0	+/- 0.02	0,14	+/- 0.5	0,17	+/- 0.5
O_2 informative CSA B415 calculated value	na	na	na	na	na	na
	Actual	Should Be	Actual	Should Be	Actual	Should Be

Post Test (Record Only)

	Zero	Span	Cal.	Zero Drift	Limit	Span Drift	Limit	Cal. Drift	Limit	OK?	Not OK*
CO	0	2,985	1,003	0	0.02	0,006	0.15	0,006	0.05	✓	
CO_2	0	1809	986	0	0.02	0,05	0.5	0,03	0.5	✓	

POLYTESTS
TESTING THROUGH YOUR REALITY

TEST DATA LOG

Date: 2021-02-24 Manufacturer: Jotul Model: F35

Project #: pI 20250 Run: 2 Tech: MM Reviewer: [illegible]

RAW DRY GAS METER READINGS

		System 1	System 2	Blank
High fire test	Final (Liter)			
	Initial (Liter)			
Low medium fire test	Final (Liter)	386 316,10	146 031,15	245 802,50
	Initial (Liter)	384 971,35	144 705,12	244 528,26

AMBIENT CONDITIONS

	Before	After
Barometer (kPa):	101,5	101,8
Dry Bulb (F):	72,8	69,9
Humidity (%):	23,2	21,6

POLYTESTS
TESTING THROUGH YOUR REALITY

FUEL DATA

Date: 2021-02-24 Manufacturer: Jotul Model: F 35

Project #: pT 20250 Run: 2 Tech: MM Reviewer: [illegible]

FUEL DESCRIPTION:

Type of wood:

KINDLING AND START-UP LOAD

Piece Size	Weight	Meter Moisture Content (% dry)				
x x in.	lbs.					
x x 16 in.	4512 lbs.	20		20		20
x x in.	lbs.					
x x 16 in.	3000 lbs.	9		9		9
x x in.	lbs.					
x x in.	lbs.					
x x in.	lbs.					
x x in.	lbs.					
x x in.	lbs.					

HIGHFIRE TEST LOAD

Piece Size	Weight	Meter Moisture Content (% dry)				
400 x 300 x 16 in.	3412 lbs.	223		247		271
250 x 300 x 16 in.	2548 lbs.	211		189		198
300 x 400 x 16 in.	~~2700~~ 3346 lbs.	279		224		216
x x in.	lbs.					
450 x 300 x 16 in.	4008 lbs.	275		219		224
350 x 200 x 16 in.	2394 lbs.	227		213		194
x x in.	lbs.					
x x in.	lbs.					
x x in.	lbs.					

POLYTESTS
TESTING THROUGH YOUR REALITY

FUEL DATA

Date: 2021-02-24 Manufacturer: Jofel Model: F35

Project #: pI 20250 Run: 2 Tech: MM Reviewer: DP

FUEL DESCRIPTION:

Type of wood:

LOW OR MEDIUM TEST LOAD

Piece Size	Weight	Meter Moisture Content (% dry)				
300 x 300 x 16 in.	3624 lbs.	251		204		193
400 x 300 x 16 in.	3,472 lbs.	241		221		189
375 x 400 x 16 in.	4,504 lbs.	208		220		216
x x in.	lbs.					
300 x 300 x 16 in.	3058 lbs.	251		216		221
325 x 3,75 x 16 in.	~~4,440~~ 459 lbs.	196		193		200
x x in.	lbs.					
x x in.	lbs.					
x x in.	lbs.					
x x in.	lbs.					
x x in.	lbs.					
x x in.	lbs.					
x x in.	lbs.					
x x in.	lbs.					

POLYTESTS
TESTING THROUGH YOUR REALITY

DILUTION TUNNEL PARTICULATE SAMPLER DATA

Date:_____ Manufacturer:_____ Model:_____

Project #: _____ Run:_____ Tech:_____ Reviewer:_____

		HIGH FIRE TEST FILTERS							
		SYSTEM 1 – 1st hour				SYSTEM 1			
Pre-test Weight Record		Probe & Housing Number	Front Filter Number	Back Filter Number	gaskets	Probe & Housing Number	Front Filter Number	Back Filter Number	gaskets
Date	Time								

		SYSTEM 1 – 1st hour				SYSTEM 1			
Post-test Weight Record		Probe & Housing Number	Front Filter Number	Back Filter Number	gaskets	Probe & Housing Number	Front Filter Number	Back Filter Number	gaskets
Date	Time								

POLYTESTS
TESTING THROUGH YOUR REALITY

DILUTION TUNNEL PARTICULATE SAMPLER DATA

Date:_____ Manufacturer:_____ Model:_____

Project #: _____ Run:_____ Tech:_____ Reviewer:_____

		HIGH FIRE TEST FILTERS				
		SYSTEM 2				
Pre-test Weight Record		Probe & Housing Number	Front Filter Number	Back Filter Number	gaskets	Blank
Date	Time					

		SYSTEM 2				
Post-test Weight Record		Probe & Housing Number	Front Filter Number	Back Filter Number	gaskets	Blank
Date	Time					

POLYTESTS
TESTING THROUGH YOUR REALITY

DILUTION TUNNEL PARTICULATE SAMPLER DATA

Date: 2021-02-23
Project #: pI 20250
Manufacturer: Jofi
Run: 2
Tech: MM
Model: F35
Reviewer: NP

Pre-test Weight Record		MEDUIM / LOW FIRE TEST FILTERS							
		SYSTEM 1 – ~~1st hour~~ MM				SYSTEM 1st hour MM			
Date	Time	Probe & Housing Number	Front Filter Number	Back Filter Number	gaskets	Probe & Housing Number	Front Filter Number	Back Filter Number	gaskets
		10	436-	437	21	18	438-	439	33
2021-02-23	17:00	94,6379	0,1755		34,5479	108,9470	0,1766		35,5405
2021-02-24	8:00	94,6378	0,1756		34,5480	108,9471	0,1765		35,5406

Post-test Weight Record		SYSTEM 1 – 1st hour				SYSTEM 1			
Date	Time	Probe & Housing Number	Front Filter Number	Back Filter Number	gaskets	Probe & Housing Number	Front Filter Number	Back Filter Number	gaskets
		10	436-	437	21	18	438	439	33
2021-02-24	16:00	94,6388	0,1762		34,5485	108,9479	0,1775		35,5417
2021-03-01	8:00	94,6381	0,1762		34,5481	108,9473	0,1774		35,5408
2021-03-02	8:00	94,6380	0,1762		34,5481	108,9472	0,1774		35,5407

POLYTESTS
TESTING THROUGH YOUR REALITY

DILUTION TUNNEL PARTICULATE SAMPLER DATA

Date: 2021-02-23 Manufacturer: Jofel Model: F 35

Project #: PI 20250 Run: 2 Tech: MA Reviewer: [illegible]

Pre-test Weight Record		MEDUIM / LOW FIRE TEST FILTERS				
		SYSTEM 2				
		Probe & Housing Number	Front Filter Number	Back Filter Number	gaskets	Blank
Date	Time	34	440 - 441		39	442
2021-02-23	17:00	110,1041	0,1762		34,4370	0,0890
2021-02-24	8:00	110,1042	0,1763		34,4369	0,0891

Post-test Weight Record		SYSTEM 2				
		Probe & Housing Number	Front Filter Number	Back Filter Number	gaskets	Blank
Date	Time	34	440 - 441		39	442
2021-02-24	16:00	110,1049	0,1774		34,4378	0,0893
2021-03-01	8:00	110,1045	0,1775		34,4370	0,0892
2021-03-02	8:00	110,1045	0,1776		34,4371	0,0892

Paramètres

Tous les facteurs de corrections et autres paramètres qui peuvent être modifiés par l'utilisateur du fichier sont regroupés ici.

Code verrouillage:	JOT	

Description du test

Test standard	EPA	
Run #	2	
Date	24-02-2021	
Technicien	m.m	
Project #	pi 20250	

Description de l'unité

Manufacturier	JOTUL	
Modèle	F35	
Combustion system	Non-Cat	
Appliance type	WOOD STOVE	
Firebox volume	1,57	cu ft.
Appliance weight empty	n.a	lbs
Fan (no, Standard, Option)	NO	

Paramètres du test

Logging time	1	min
Manufacturer's rated heat output	n.a	BTU/h Donnée fournie par le manfacturier
Targeted category	1	
Targeted output	n.a	BTU/h
Cp steel	n.a	BTU/lb-°F

Échantillonnage

Blank sampling rate	0,20	cuft/min
Internal probe diameter	0,18	in.
Calibration Factor (DGM #1):	1,002	Dimensionless
Equipment number (DGM #1):	EM 178	
Calibration Factor (DGM #2):	1,001	Dimensionless
Equipment number (DGM #2):	EM 318	
Calibration Factor (DGM #3):	0,990	
Equipment number (DGM #3):	EM 179	Dimensionless

Tunnel

Targeted tunnel flow rate	350	scfm
Tunnel diameter	8	in.
Molecular weight	29	29 as per ASTM E2515
Pitot tube type	Standard	
Pitot tube coefficient	0,99	Dimensionless

Project nu.	pi 20250
Date	24-02-2021
Technicien	m.m

Fuel data

Fuel type	Cord	
Fuel specie	Oak	
HHV	20207,0	kJ/kg
%C	49,5	
%H	6,6	
%O	43,7	
%Ash	0,2	
HHV	8689,9	Btu/lb
LHV	7600,4	Btu/lb

Default Fuel Values

	D. Fir	Oak/Maple
HHV	19 810	20 207
%C	48,73	49,5
%H	6,87	6,62
%O	43,9	43,7
%Ash	0,5	0,2
HHV (Btu/lb)	8519	8690
LHV (Btu/lb)	7451	7600

Adjunct to ASTM E XXXX Wood Heater Cordwood Test Method - May 10, 2017 Version
Cordwood Fuel Load Calculators - 10 lb/ft^3 Nominal Load Density
Core 45-65% of Total Load Weight, Remainder 35-55% of Total Load Weight
Values to be input manually

For All Usable Firebox Volumes - High Fire Test Only

Nominal Required Load Density (wet basis)	10	lb/ft^3			
Usable Firebox Volume	1,57	ft^3			
Total Nom. Load Wt. Target	15,70	lb			
Total Load Wt. Allowable Range	14,90	to	16,50	lb	
Core Target Wt. Allowable Range	7,10	to	10,20	lb	
Remainder Load Wt. Allowable Range	5,50	to	8,60	lb	
					Mid-Point
Core Load Pc. Wt. Allowable Range	2,40	to	3,90	lb	3,15
Remainder Load Pc. Wt. Allowable Range	1,60	to	8,60	lb	5,10
	Pc. #				
Core Load Piece Wt. Actual	1	3,41	lb	In Range	
	2	2,55	lb	In Range	
	3	3,35	lb	In Range	
Core Load Total. Wt. Actual		9,31	lb	In Range	
	Pc. #				
Remainder Load Piece Wt.	1	4,01	lb	In Range	
(1 to 3 Pcs.)	2	2,39	lb	In Range	
	3		lb	NA	
Remainder Load Tot. Wt. Act		6,40	lb	In Range	
Total Load Wt. Actual		15,71	lb	In Range	
Core % of Total Wt.		59%		In Range	45-65%
Remainder % of Total Wt.		41%		In Range	35-55%
Actual Load % of Nominal Target		100%		In Range	95-105%
Actual Fuel Load Density		10,0	lb/ft^3		
Kindling and Start-up Fuel					
Maximim Kindling Wt. (20% of Tot. Load Wt.)		3,14	lb		
Actual Kindling Wt.		3,00	lb	In Range	19,1%
Maximum Start-up Fuel Wt. (30% of Tot. Load Wt.)		4,71	lb		
Actual Start-up Fuel Wt.		4,51	lb	In Range	28,7%
Allowable Residual Start-up Fuel Wt. Range	1,6	to	3,1	lb	Mid-Point
Actual Residual Start-up Fuel Wt.		2,7	lb	In Range	2,4
Total Wt. All Fuel Added (wet basis)		23,22	lb		
High Fire Test Run End Point Range	Low		High		Mid-Point
Based on Fuel Load Wt. (w/tares)	1,4	to	1,7	lb	1,6
Actual Fuel Load Ending Wt.		1,5	lb	In Range	

Fuel Piece Moisture Reading (%-dry basis)							
1	2	3	Ave.		Pc. Wt. Dry Basis		
22,3	24,3	27,1	24,6	In Range	2,74 lb	1,24 kg	
21,1	18,9	19,8	19,9	In Range	2,12 lb	0,96 kg	
27,9	23,4	21,6	24,3	In Range	2,69 lb	1,22 kg	
27,5	21,9	23,4	24,3	In Range	3,23 lb	1,46 kg	
22,7	21,3	19,4	21,1	In Range	1,98 lb	0,90 kg	
			NA	NA	NA lb	NA kg	
Total Load Ave. MC (%-dry basis)			23,1	In Range			
Total Load Ave. MC % (wet basis)			18,8				
Total Test Load Weight (dry basis)					12,76 lb	5,79 kg	
Kindling Moisture (%-dry basis)							
9	9	9	9,0	In Range	2,75 lb	1,25 kg	
Start-up Fuel Moisture Readings (%-dry basis)							
20	20	20	20,0	In Range	3,76 lb	1,71 kg	
Total Wt. All Fuel Added (dry basis)					19,27 lb	8,74 kg	
Total Wt. All Fuel Burned (dry basis)					15,1 lb	6,8 kg	

Load pieces Length in. 16 in.

Elapsed		Weight			Flue	Room	Tunnel	Unit	Unit	Unit	Unit	Unit	Catalyst	Catalyst	Catalyst
Time	Raw data row	Remaining	CO	CO_2	Gas	Temp	Dry Bulb	Top	Back	R.Side	L.Side	Bottom	Down	Center	up
min		lbs	%	%	°F	°F	°F	°F	°F	°F	°F	°F	°F	°F	°F
0,00	25,00	7,4	0,0	0,0	98,6	69,3	80,8	73,8	71,3	70,6	70,5	72,0	#######	#######	#######
1,0	26,0	7,3	0,0	0,0	114,1	69,0	80,6	77,2	71,6	70,6	70,5	72,0	#######	#######	#######
2,0	27,0	7,3	0,0	0,0	156,7	69,1	81,2	86,8	72,4	70,7	70,5	72,0	#######	#######	#######
3,0	28,0	7,2	0,0	-0,1	185,3	69,3	80,7	102,6	73,2	70,7	70,6	72,0	#######	#######	775,1
4,0	29,0	7,1	0,0	-0,1	217,9	69,2	81,7	120,9	74,2	70,7	70,6	72,0	#######	#######	#######
5,0	30,0	7,0	0,0	-0,1	239,7	69,0	82,1	134,7	75,6	70,8	70,7	72,0	#######	#######	#######
6,0	31,0	6,9	0,0	0,0	261,3	69,2	82,8	147,9	77,6	70,9	70,9	72,0	#######	#######	#######
7,0	32,0	6,8	0,0	0,0	293,4	69,3	84,4	163,8	80,2	71,1	71,2	72,1	#######	#######	#######
8,0	33,0	6,7	0,0	0,0	350,2	69,3	87,6	192,0	83,7	71,3	71,5	72,1	#######	#######	#######
9,0	34,0	6,5	0,0	0,0	432,5	69,2	92,9	244,8	88,4	71,7	72,0	72,3	#######	#######	#######
10,0	35,0	6,2	0,0	-0,1	469,5	69,2	95,4	296,2	94,6	72,2	72,7	72,5	#######	#######	#######
11,0	36,0	6,0	0,0	0,0	523,5	69,2	101,1	342,5	101,8	72,9	73,6	72,9	#######	#######	#######
12,0	37,0	5,7	0,0	-0,1	588,4	69,4	107,1	403,0	109,7	73,7	74,8	73,3	#######	#######	#######
13,0	38,0	5,4	0,0	-0,1	662,7	69,3	114,4	475,2	118,1	74,9	76,4	73,9	#######	#######	#######
14,0	39,0	5,0	0,0	-0,1	700,0	69,4	119,3	550,5	127,2	76,4	78,4	74,7	#######	#######	#######
15,0	40,0	4,7	0,0	-0,1	733,5	69,6	125,2	609,9	136,7	78,3	81,0	75,7	#######	#######	#######
16,0	41,0	4,4	0,0	0,0	707,4	69,5	123,3	646,2	145,2	80,7	84,0	77,1	#######	#######	#######
17,0	42,0	4,1	0,0	0,0	672,8	69,5	121,0	660,3	152,7	83,6	87,7	78,8	#######	#######	#######
18,0	43,0	4,0	0,0	0,0	636,9	69,6	117,2	657,2	159,9	87,1	91,9	81,1	#######	#######	#######
19,0	44,0	3,8	0,8	16,2	609,9	69,7	114,3	645,8	166,6	90,9	96,6	83,9	#######	#######	#######
20,0	45,0	3,6	0,5	16,9	592,5	69,4	113,3	634,1	173,4	95,2	101,8	87,3	#######	#######	#######
21,0	46,0	3,4	0,6	18,0	588,1	69,4	113,0	624,3	180,6	99,8	107,3	91,4	#######	#######	#######
22,0	47,0	3,3	0,6	18,0	590,3	69,6	112,1	619,4	188,5	104,8	113,0	96,0	#######	#######	#######
23,0	48,0	3,1	0,6	18,1	565,1	69,8	111,8	612,6	198,1	110,1	118,9	101,2	#######	#######	#######
24,0	49,0	3,0	0,6	18,1	557,2	69,9	113,0	603,9	208,6	115,5	124,9	106,9	#######	#######	#######
25,0	50,0	2,9	0,6	18,1	546,4	70,2	113,3	595,5	218,9	121,1	130,8	113,0	#######	#######	#######
26,0	51,0	2,8	0,6	18,1	536,7	70,2	113,4	588,0	229,2	126,6	136,7	119,4	#######	#######	#######
27,0	52,0	3,0	0,6	18,1	547,9	70,5	124,7	582,8	239,8	132,1	142,3	126,2	#######	#######	#######
28,0	53,0	18,0	0,6	18,1	550,3	70,5	143,5	578,9	250,6	137,7	147,9	135,6	#######	#######	#######
29,0	54,0	17,7	0,6	18,1	610,7	70,5	125,5	601,4	253,3	143,0	153,3	144,6	#######	#######	#######
30,0	55,0	17,5	0,6	18,1	637,5	70,7	126,8	626,2	253,7	148,0	158,5	153,8	#######	#######	#######
31,0	56,0	17,2	0,6	18,1	660,4	70,8	127,8	649,5	253,1	153,0	163,4	163,0	#######	#######	#######
32,0	57,0	16,9	0,3	10,9	690,4	71,0	128,5	673,8	252,3	157,7	168,1	172,0	#######	#######	#######
33,0	58,0	16,6	0,2	9,9	713,5	70,9	132,5	697,1	252,2	162,4	172,9	180,5	#######	#######	#######
34,0	59,0	16,2	0,9	8,1	732,3	70,9	132,8	717,8	253,1	167,0	177,7	188,5	#######	#######	#######
35,0	60,0	15,9	0,0	0,9	743,3	71,0	133,8	735,6	254,6	171,8	182,7	195,9	#######	#######	#######
36,0	61,0	15,6	0,0	0,1	754,6	70,8	136,8	751,9	256,5	176,7	187,9	203,1	#######	#######	#######
37,0	62,0	15,2	0,0	0,0	771,2	70,7	138,1	766,6	258,7	181,5	193,2	209,9	#######	#######	#######
38,0	63,0	14,9	0,0	0,0	785,8	70,9	138,5	780,4	261,4	186,6	198,9	216,6	#######	#######	#######
39,0	64,0	14,6	0,0	0,0	800,9	71,0	140,8	794,1	264,3	191,6	204,8	223,2	#######	#######	#######
40,0	65,0	14,2	0,0	0,0	810,2	71,0	142,8	805,2	267,7	196,8	210,8	229,8	#######	#######	#######
41,0	66,0	13,9	0,0	0,0	814,4	70,7	143,6	816,8	271,5	202,1	216,9	236,5	#######	#######	#######
42,0	67,0	13,6	0,0	0,0	815,5	71,2	144,8	824,7	275,4	207,4	223,2	243,1	#######	#######	#######
43,0	68,0	13,2	0,0	0,0	810,4	70,8	145,0	829,6	279,7	212,9	229,6	249,9	#######	#######	#######
44,0	69,0	12,9	0,0	0,0	813,1	71,3	144,9	835,4	284,1	218,5	235,9	256,9	#######	#######	#######
45,0	70,0	12,6	0,0	0,0	804,2	71,5	142,8	841,6	288,6	224,0	242,4	264,0	#######	#######	#######
46,0	71,0	12,3	0,0	0,0	795,1	71,1	142,6	845,8	293,2	229,8	248,8	271,1	#######	#######	#######
47,0	72,0	12,0	0,0	0,0	783,6	71,0	141,3	848,1	298,1	235,4	255,1	278,3	#######	#######	#######
48,0	73,0	11,7	0,0	0,0	778,1	70,9	141,2	849,8	302,6	241,0	261,5	285,6	#######	#######	#######
49,0	74,0	11,5	0,0	0,0	774,3	70,9	142,1	850,4	307,1	246,7	267,7	292,8	#######	#######	#######
50,0	75,0	11,2	0,0	0,0	772,5	71,1	141,1	851,9	311,8	252,4	273,8	300,1	#######	#######	#######
51,0	76,0	10,9	0,0	0,0	773,4	70,8	142,2	854,4	316,3	257,9	279,7	307,3	#######	#######	#######
52,0	77,0	10,6	0,0	0,0	773,8	71,1	141,3	856,8	320,9	263,5	285,6	314,6	#######	#######	#######
53,0	78,0	10,3	0,0	0,0	772,8	71,0	140,7	859,7	325,5	268,9	291,3	321,8	#######	#######	#######
54,0	79,0	10,1	0,0	0,0	770,5	71,0	139,4	860,0	330,3	274,3	297,0	329,2	#######	#######	#######
55,0	80,0	9,8	0,0	0,0	766,9	71,0	138,9	863,2	335,3	279,6	302,5	336,4	#######	#######	#######
56,0	81,0	9,6	0,0	0,0	765,6	71,2	139,4	863,7	340,2	284,8	307,8	343,8	#######	#######	#######
57,0	82,0	9,3	0,0	0,0	766,2	71,1	138,5	865,8	345,5	290,0	312,9	351,4	#######	#######	#######
58,0	83,0	9,0	0,0	0,0	767,6	71,0	139,0	868,9	350,9	295,0	317,8	359,1	#######	#######	#######
59,0	84,0	8,8	0,0	0,0	768,5	71,5	139,3	870,2	356,5	299,9	322,7	367,0	#######	#######	#######
60,0	85,0	8,5	0,0	0,0	768,5	71,4	138,5	871,6	362,6	304,7	327,5	375,1	#######	#######	#######
61,0	86,0	8,3	0,0	0,0	770,5	71,5	139,2	873,8	368,8	309,6	332,0	383,1	#######	#######	#######
62,0	87,0	8,0	0,0	0,0	772,7	71,5	138,5	876,5	375,4	314,4	336,3	391,1	#######	#######	#######
63,0	88,0	7,8	0,0	0,0	780,3	71,3	139,4	879,4	382,2	319,0	340,7	399,0	#######	#######	#######
64,0	89,0	7,6	0,0	0,0	809,8	71,9	146,9	927,3	368,4	322,4	343,0	395,4	#######	#######	#######
65,0	90,0	7,4	0,0	0,0	809,8	71,8	145,3	920,8	377,9	325,9	346,6	403,4	#######	#######	#######
66,0	91,0	7,2	0,0	0,0	798,9	71,8	143,6	914,2	387,4	329,5	350,2	411,3	#######	#######	#######
67,0	92,0	7,0	0,0	0,0	788,1	71,7	141,9	907,6	397,0	333,1	353,8	419,3	#######	#######	#######
68,0	93,0	6,8	0,0	0,0	777,2	71,7	140,3	901,1	406,5	336,6	357,4	427,2	#######	#######	#######
69,0	94,0	6,6	0,0	0,0	766,3	71,6	138,6	894,5	416,0	340,2	361,0	435,2	#######	#######	#######
70,0	95,0	6,4	0,0	0,0	755,5	71,5	137,0	888,0	425,5	343,8	364,6	443,1	#######	#######	#######
71,0	96,0	6,2	0,0	0,0	744,6	71,5	135,3	881,4	435,1	347,4	368,2	451,1	#######	#######	#######
72,0	97,0	6,1	0,0	0,0	733,7	71,4	133,6	874,8	444,6	350,9	371,9	459,1	#######	#######	#######
73,0	98,0	5,9	0,0	0,0	717,6	71,4	132,0	864,3	454,4	354,4	375,4	467,1	#######	#######	#######
74,0	99,0	5,7	0,0	0,0	701,4	71,2	131,2	852,5	463,6	357,4	378,7	475,0	#######	#######	#######
75,0	100,0	5,6	0,0	0,0	691,4	71,4	129,2	839,0	472,5	360,4	381,8	483,0	#######	#######	#######
76,0	101,0	5,4	0,0	0,0	682,4	71,3	127,4	828,3	480,0	363,0	384,4	491,0	#######	#######	#######
77,0	102,0	5,3	0,0	0,0	673,9	71,4	127,3	818,1	486,3	365,6	387,5	499,0	#######	#######	#######
78,0	103,0	5,1	0,0	0,0	665,8	71,5	125,9	807,0	491,5	367,8	390,1	506,9	#######	#######	#######
79,0	104,0	5,0	0,0	0,0	660,8	71,6	125,5	797,4	495,9	369,8	392,4	514,7	#######	#######	#######
80,0	105,0	4,8	0,0	0,0	657,3	71,6	124,3	789,1	500,4	371,4	394,4	522,4	#######	#######	#######
81,0	106,0	4,7	0,0	0,0	652,7	71,2	124,4	783,6	504,5	372,8	396,4	530,0	#######	#######	#######
82,0	107,0	4,7	0,0	0,0	645,4	71,1	123,3	775,7	508,4	373,9	398,0	537,4	#######	#######	2147,2
83,0	108,0	4,5	0,0	0,0	635,7	71,2	122,0	765,9	513,0	374,7	399,2	544,8	#######	#######	#######
84,0	109,0	4,4	0,0	0,0	629,1	71,0	121,6	755,6	518,7	375,1	400,3	552,1	#######	#######	-181,6
85,0	110,0	4,3	0,0	0,0	624,7	71,1	120,1	747,3	524,8	375,3	401,0	559,3	#######	#######	#######
86,0	111,0	4,2	0,0	0,0	620,6	71,1	119,5	739,9	530,3	375,1	401,2	566,4	#######	#######	#######
87,0	112,0	4,1	0,0	0,0	619,8	71,2	118,3	733,3	536,3	374,6	401,3	573,8	#######	#######	#######
88,0	113,0	4,0	0,0	0,0	618,6	71,3	118,2	730,2	541,8	374,2	401,4	580,8	#######	#######	#######
89,0	114,0	3,9	0,0	0,0	616,4	71,3	117,4	725,3	547,0	373,6	401,4	587,9	#######	#######	#######
90,0	115,0	3,8	0,0	0,0	611,9	71,2	116,7	721,1	552,1	372,7	401,4	595,0	#######	#######	#######
91,0	116,0	3,7	0,1	7,6	601,7	71,0	115,6	712,9	556,6	371,9	400,9	601,9	#######	#######	#######
92,0	117,0	3,6	0,1	7,8	595,3	71,1	115,3	707,5	560,8	371,1	400,5	608,8	#######	#######	#######
93,0	118,0	3,6	0,1	7,7	591,6	71,3	114,7	700,7	564,2	370,1	400,1	615,7	#######	#######	#######
94,0	119,0	3,5	0,2	7,6	585,2	71,2	114,0	691,6	566,9	369,1	399,2	622,4	#######	#######	#######
95,0	120,0	3,5	0,2	7,5	579,5	70,9	112,9	685,2	569,9	368,2	398,2	629,0	#######	#######	#######
96,0	121,0	3,4	0,2	7,1	572,0	71,1	112,5	678,0	572,5	366,7	396,5	635,6	#######	#######	#######
97,0	122,0	3,3	0,3	6,9	565,2	70,7	112,0	669,4	574,7	365,5	394,8	642,2	#######	#######	#######
98,0	123,0	3,3	0,3	6,5	558,1	70,7	111,4	661,6	576,2	364,1	393,0	648,5	#######	#######	#######
99,0	124,0	3,2	0,3	6,3	552,2	70,7	110,9	651,0	577,7	362,7	391,1	654,9	#######	#######	#######
100,0	125,0	3,2	0,3	6,2	546,9	70,8	110,5	642,3	578,7	361,3	388,8	661,2	#######	#######	#######
101,0	126,0	3,1	0,3	6,2	539,8	70,7	110,0	633,7	579,5	359,8	386,6	667,4	#######	#######	#######
102,0	127,0	3,1	0,4	6,1	529,7	70,8	109,1	622,4	580,2	358,3	384,0	673,6	#######	#######	#######
103,0	128,0	3,1	0,4	5,7	520,4	70,6	108,0	611,3	581,0	356,8	381,4	679,8	#######	#######	#######

Adjunct to ASTM E XXXX Wood Heater Cordwood Test Method - May 10, 2017 Version

Cordwood Fuel Load Calculators - 12 lb/ft^3 Nominal Load Density

Core 45-65% of Total Load Weight, Remainder 35-55% of Total Load Weight

Values to be input manually

For Usable Firebox Volumes up to 3.0 ft^3 - Low and Medium Fire

Nominal Required Load Density (wet basis)	12	lb/ft^3			
Usable Firebox Volume	1,57	ft^3			
Total Nom. Load Wt. Target	18,84	lb			
Total Load Wt. Allowable Range	17,90	to	19,78	lb	
Core Target Wt. Allowable Range	8,478	to	12,25	lb	
Remainder Load Wt. Allowable Range	6,59	to	10,36	lb	
					Mid-Point
Core Load Fuel Pc. Wt. Allowable Range	2,83	to	4,71	lb	3,77
Remainder Load Pc. Wt. Allowable Range	1,88	to	5,65	lb	3,77
	Pc. #				
Core Load Piece Wt. Actual	1	3,62	lb	In Range	
	2	3,47	lb	In Range	
	3	4,50	lb	In Range	
Core Load Total. Wt. Actual		11,60	lb	In Range	
	Pc. #				
Remainder Load Piece Wt.	1	3,06	lb	In Range	
(2 or 3 Pcs.)	2	4,59	lb	In Range	
	3		lb	NA	
Remainder Load Piece Weight Ratio - Small/Large		67%		In Range	≤ 67%
Remainder Load Tot. Wt. Act		7,65	lb	In Range	
Total Load Wt. Actual		19,25	lb	In Range	
Core % of Total Wt.		60%		In Range	45-65%
Remainder % of Total Wt.		40%		In Range	35-55%
Actual Load % of Nominal Target		102%		In Range	95-105%
Actual Fuel Load Density		12,3	lb/ft^3		
Allowable Charcoal Bed Wt. Range (lb)	2,0	to	3,8		Mid-Point
Actual Charcoal Bed Wt.		3,0	lb	In Range	2,9
Actual Fuel Load Ending Wt.		0,0	lb	Valid Test	≥ 90%
Total Wt. of Fuel Burned During Test Run lb.		19,2	lb		
Load pieces Length in.		16	in.		

Fuel Piece Moisture Reading (%-dry basis)

1	2	3	Ave.		Pc. Wt. Dry Basis			
25,1	20,4	19,3	21,6	In Range	2,98	lb	1,35	kg
24,1	22,1	18,9	21,7	In Range	2,85	lb	1,29	kg
20,8	22	21,6	21,5	In Range	3,71	lb	1,68	kg
25,1	21,6	22,1	22,9	In Range	2,49	lb	1,13	kg
19,6	19,3	20	19,6	In Range	3,84	lb	1,74	kg
			NA	NA	NA	lb	NA	kg
Total Load Ave. MC % (dry basis)			21,3	In Range				
Total Load Ave. MC % (wet basis)			17,6					
Total Test Load Weight (dry basis)					15,87	lb	7,20	kg
Total Fuel Weight Burned During Test Run (dry basis)					15,9	lb	7,20	kg

For Usable Firebox Volumes above 3.0 ft^3 - Low and Medium Fire

Nominal Required Load Density (wet basis)	12	lb/ft^3			
Usable Firebox Volume		ft^3			
Total Nom. Load Wt. Target	0	lb			
Total Load Wt. Allowable Range	0,00	to	0,00	lb	
Core Target Wt. Allowable Range	0,00	to	0,00	lb	
Remainder Load Wt. Allowable Range	0,00	to	0,00	lb	
					Mid-Point
Core Load Fuel Pc. Wt. Allowable Range	0,00	to	0,00	lb	0,00
Remainder Load Pc. Wt. Allowable Range	0,00	to	0,00	lb	0,00
	Pc. #				
Core Load Piece Wt. Actual	1		lb	In Range	
	2		lb	In Range	
	3		lb	In Range	
Core Load Total. Wt. Actual		0,00	lb	In Range	
	Pc. #				
Remainder Load Piece Wt.	1		lb	In Range	
(3 or 4 Pcs.)	2		lb	In Range	
	3		lb	In Range	
	4		lb	NA	
Remainder Load Piece Weight Ratio - Small/Large		#NOMBRE!		#NOMBRE!	≤ 67%
Remainder Load Tot. Wt. Act		0,00	lb	In Range	
Total Load Wt. Actual		0,00	lb	In Range	
Core % of Total Wt.		#DIV/0!		#DIV/0!	45-65%
Remainder % of Total Wt.		#DIV/0!		#DIV/0!	35-55%
Actual Load % of Nominal Target		#DIV/0!		#DIV/0!	95-105%
Actual Fuel Load Density		#DIV/0!	lb/ft^3		
Allowable Charcoal Bed Wt. Range (lb)	0,1	to	-0,1		Mid-Point
Actual Charcoal Bed Wt.			lb	Out of Range	0,0
Actual Fuel Load Ending Wt.			lb	Valid Test	≥ 90%
Total Wt. of Fuel Burned During Test Run lb.		0,0	lb		

Fuel Piece Moisture Reading (%-dry basis)

1	2	3	Ave.		Pc. Wt. Dry Basis			
			#DIV/0!	#DIV/0!	#DIV/0!	lb	#DIV/0!	kg
			#DIV/0!	#DIV/0!	#DIV/0!	lb	#DIV/0!	kg
			#DIV/0!	#DIV/0!	#DIV/0!	lb	#DIV/0!	kg
			#DIV/0!	#DIV/0!	#DIV/0!	lb	#DIV/0!	kg
			#DIV/0!	#DIV/0!	#DIV/0!	lb	#DIV/0!	kg
			#DIV/0!	#DIV/0!	#DIV/0!	lb	#DIV/0!	kg
			NA	NA	NA	lb	NA	kg
Total Load Ave. MC % (dry basis)			#DIV/0!	#DIV/0!				
Total Load Ave. MC % (wet basis)			#DIV/0!					
Total Test Load Weight (dry basis)					#DIV/0!	lb	#DIV/0!	kg
Total Fuel Weight Burned During Test Run (dry basis)					#DIV/0!	lb	#DIV/0!	kg

	Start	End
Barometer (kPa):	101,5	101,8
Barometer (in.Hg):	29,972939	30,06152868
Dry Bulb (F):	72,8	69,9
Humidity (%):	23,2	21,6
Air velocity (ft/min)	0	0

High fire test						
DGM #1	Final:	#VALEUR!	cuft	Final:	na	Liter
	Initial:	#VALEUR!	cuft	Initial:	na	Liter
DGM #2	Final:	#VALEUR!	cuft	Final:	na	Liter
	Initial:	#VALEUR!	cuft	Initial:	na	Liter
DGM room	Final:	#VALEUR!	cuft	Final:	na	Liter
	Initial:	#VALEUR!	cuft	Initial:	na	Liter

min or med burnrate						
DGM #1	Final:	13642,625	cuft	Final:	386316,100	Liter
	Initial:	13595,135	cuft	Initial:	384971,350	Liter
DGM #2	Final:	5157,042	cuft	Final:	146031,150	Liter
	Initial:	5110,213	cuft	Initial:	144705,120	Liter
DGM room	Final:	8680,434	cuft	Final:	245802,500	Liter
	Initial:	8635,434	cuft	Initial:	244528,260	Liter

Numéro de la ligne dans "Raw data" à partir duquel les données du test commence	129
Numéro de la ligne dans "Raw data" à partir duquel les données du highfire test commence	
Numéro de la ligne dans "Raw data" à partir duquel les données du min ou medium fire test commence	129

Autres données à rentrer: dans preload data, load data, traverse et filter set weight

Project nu.	pi 20250
Date	24-02-2021
Technicien	m.m

Filter set weight Low/ medium fire

	System 1 (g) 1st hour				System 1 (g)				System 2 (g)				Ambient blank (g)	Date	Heure
	probe	front / Back		gasket	probe	front / Back		gasket	probe	front / Back		gasket	Filter		
Number	18	438-439		33	10	436-437		21	34	440-441		39	442		
Before (1)															
Before (2)															
Before (3)															
Before (4)															
Before (5)	108,9470	0,1766		35,5405	94,6379	0,1755		34,5479	110,1041	0,1762		34,4370	0,0890	2021-02-23	17:00
Before (6)	108,9471	0,1765		35,5406	94,6378	0,1756		34,5480	110,1042	0,1763		34,4369	0,0891	2021-02-24	08:00
After (1)	108,9479	0,1775		35,5417	94,6388	0,1762		34,5485	110,1049	0,1774		34,4378	0,0893	2021-02-24	16:00
After (2)	108,9473	0,1774		35,5408	94,6381	0,1762		34,5481	110,1045	0,1775		34,4370	0,0892	2021-03-01	08:00
After (3)	108,9472	0,1774		35,5407	94,6380	0,1762		34,5481	110,1045	0,1776		34,4371	0,0892	2021-03-02	08:00
After (4)															
After (5)															
After (6)	108,9472	0,1774		35,5407	94,6380	0,1762		34,5481	110,1045	0,1776		34,4371	0,0892	2021-03-02	08:00
Difference	0,0001	0,0009	0,0000	0,0001	0,0002	0,0006	0,0000	0,0001	0,0003	0,0013	0,0000	0,0002	0,0001		
Total (mg)		1,1				2				1,8			0,1		
Total ajusté (mg)		**1,00**				**1,90**				**1,70**					

Project nu.	pi 20250
Date	24-02-2021
Technicien	M.M

SFBA EPA EMISSION RESULTS

Test Duration: **250** min

PRESSURE FACTOR:	DGM 1	0,97352	
	DGM 2	0,96401	
	DGM 3	1,00325	
TEMPERATURE FACTORS	DGM 1	0,99155	
	DGM 2	0,98495	
	DGM 3	0,99626	
VOLUMES SAMPLED	DGM 1	45,930	SCft
	DGM 2	44,524	Scft
	DGM 3	44,525	SCft

TOTAL TUNNEL VOLUME : 86250

SAMPLE RATIOS

Sample Train 1:	1877,858
Sample Train 2:	1937,168

Paticulate concentration

Sample Train 1	**0,000044**	g/dscf
Sample Train 2	**0,000040**	g/dscf
Room	**0,000002**	g/dscf

TOTAL EMISSIONS

Sample Train 1	**3,56**	g
Sample Train 2	**3,29**	g

EMISSION RATES

Sample Train 1	**0,85**	g/hr
Sample Train 2	**0,79**	g/hr
1st hour emission rate	**2,07**	g/hr

	Train 1	Train 2
Cs	4,354E-05	4,0428E-05

RESULTS

Average emission rate: 0,82 g/hr

Burn Rate : 1,727 Dry kg/hr

BAROMETRIC PRESSURE

Average:	30,0172337	in Hg
Start:	29,97293872	in Hg
End:	30,06152868	in Hg

DGM CONTROLLER VALUES

DGM 1	Final:	13642,625	Cuft
	Initial:	13595,135	Cuft
DGM 2	Final:	5157,042	Cuft
	Initial:	5110,213	Cuft
DGM #3	Final:	8680,434	Cuft
	Initial:	8635,434	Cuft

TEMPERATURES

DGM 1	532,500	°R
DGM 2	536,069	°R

CALIBRATION FACTORS

DGM 1	1,0019
DGM 2	1,0014
DGM #3	0,9900

TUNNEL FLOW RATE: 345,000 Dscfm

PARTICULATE CATCH

Total Sample Train 1:	2,00	mg
Total Sample Train 2:	1,80	mg
Total Sample Train 1 1st hour:	1,10	mg

DEVIATION: 3,92%

*		*	*	*	*1	*2	*3	*4	*5	*6	*7	*8	Mass flow 1	DGM 1	DGM 1	Filter 1	Mass flow 2	DGM 2	DGM 2	Filter 2
Elapsed		Weight			Flue	Room	Tunnel	Unit	Unit	Unit	Unit	Unit	Reading	Inlet T	Outlet T	Temp	Reading	Inlet T	Outlet T	Temp
Time	Raw data row	Remaining	CO	CO_2	Gas	Temp	Dry Bulb	Top	Back	R.Side	L.Side	Bottom								
min		lbs	%	%	°F	°F	°F	°F	°F	°F	°F	°F	cuft/min	oF	oF	oF	cuft/min	oF	oF	oF
0,00	129,00	18,9	0,5	5,1	451,3	71,1	128,2	587,0	584,2	355,2	378,6	688,2	0,18	72,39	72,84	86,44	0,18	72,11	73,98	83,65
1,0	130,0	18,7	0,3	5,2	537,1	70,9	113,9	584,4	570,3	353,6	375,9	695,7	0,18	72,62	72,80	85,82	0,18	72,29	74,12	83,39
2,0	131,0	18,5	0,2	9,0	605,7	71,1	116,7	603,7	552,4	351,1	372,8	701,7	0,18	72,70	72,81	85,34	0,18	72,47	74,27	83,18
3,0	132,0	18,2	0,1	11,8	650,8	71,1	120,3	635,2	533,8	349,6	370,2	706,8	0,18	72,77	72,83	84,95	0,18	72,68	74,41	82,97
4,0	133,0	17,9	0,1	13,2	679,5	71,0	122,7	670,0	515,4	347,6	367,2	710,9	0,18	72,70	72,80	84,62	0,18	72,71	74,52	82,85
5,0	134,0	17,7	0,1	13,9	642,9	71,1	116,9	700,4	498,3	346,3	365,2	714,3	0,18	72,65	72,79	84,23	0,18	72,80	74,63	83,92
6,0	135,0	17,5	0,1	12,6	627,4	71,0	116,1	717,3	482,8	345,2	363,5	716,9	0,18	72,63	72,79	83,93	0,18	72,87	74,73	86,57
7,0	136,0	17,2	0,1	12,4	630,4	70,8	116,2	731,6	469,0	344,3	362,2	718,5	0,18	72,65	72,84	83,66	0,18	72,98	74,86	87,19
8,0	137,0	17,0	0,1	12,8	640,4	70,8	117,3	747,8	456,6	343,6	360,9	719,4	0,18	72,67	72,88	83,47	0,18	73,08	74,99	86,97
9,0	138,0	16,8	0,1	13,3	648,8	70,6	117,3	765,5	445,4	342,9	359,9	719,7	0,18	72,69	72,91	83,30	0,18	73,24	75,11	86,61
10,0	139,0	16,6	0,1	13,7	660,7	70,8	119,0	783,7	435,3	342,7	359,1	719,3	0,18	72,69	72,96	83,15	0,18	73,42	75,27	86,37
11,0	140,0	16,3	0,2	14,1	670,3	71,0	119,5	803,1	426,3	342,6	358,8	718,5	0,18	72,70	72,98	83,04	0,18	73,47	75,40	86,16
12,0	141,0	16,1	0,1	14,1	682,8	70,8	120,7	823,7	418,2	342,6	358,5	717,3	0,18	72,70	72,98	83,00	0,18	73,57	75,54	85,92
13,0	142,0	15,8	0,1	14,4	694,4	70,8	121,8	843,8	411,0	342,8	358,7	715,8	0,18	72,67	72,99	82,95	0,18	73,60	75,66	85,62
14,0	143,0	15,6	0,1	14,5	703,6	70,9	122,3	860,5	404,3	343,0	358,8	714,0	0,18	72,66	73,01	82,89	0,18	73,65	75,77	85,39
15,0	144,0	15,3	0,2	14,5	706,4	71,0	123,3	871,9	398,2	343,3	359,2	712,1	0,18	72,68	73,02	82,85	0,18	73,77	75,87	85,06
16,0	145,0	15,1	0,2	14,4	707,8	71,0	123,5	880,3	392,9	343,9	359,7	710,0	0,18	72,70	73,05	82,80	0,18	73,81	75,94	84,79
17,0	146,0	14,8	0,2	14,4	706,4	71,2	122,4	884,5	388,1	344,4	360,4	707,9	0,18	72,77	73,07	82,77	0,18	73,88	76,05	84,51
18,0	147,0	14,6	0,2	14,2	706,1	71,2	123,3	886,1	383,8	345,2	361,3	705,6	0,18	72,87	73,11	82,67	0,18	74,00	76,15	84,36
19,0	148,0	14,3	0,2	14,2	703,5	71,1	123,2	884,8	380,0	345,8	362,0	703,4	0,18	72,99	73,16	82,74	0,18	74,12	76,30	84,37
20,0	149,0	14,1	0,2	14,1	700,0	71,1	123,1	883,5	376,7	346,6	362,9	701,1	0,18	73,10	73,21	82,74	0,18	74,26	76,40	84,38
21,0	150,0	13,9	0,2	13,9	695,1	71,5	123,1	879,9	373,9	347,9	363,8	698,8	0,18	73,19	73,38	82,78	0,18	74,49	76,51	84,29
22,0	151,0	13,7	0,2	13,8	690,1	71,6	122,5	876,1	371,7	348,9	364,9	696,6	0,18	73,32	73,50	82,78	0,18	74,86	76,65	84,14
23,0	152,0	13,4	0,2	13,6	683,0	71,4	123,3	873,1	369,7	349,8	366,0	694,4	0,18	73,39	73,60	82,88	0,18	75,04	76,77	84,17
24,0	153,0	13,2	0,2	13,5	676,4	71,9	124,2	867,0	368,1	351,1	367,4	692,2	0,18	73,55	73,76	82,94	0,18	75,15	76,92	84,19
25,0	154,0	13,0	0,2	13,3	672,0	71,9	124,0	861,6	367,0	352,3	368,6	690,1	0,18	73,70	73,80	83,00	0,18	75,33	77,08	84,21
26,0	155,0	12,8	0,2	13,2	666,6	71,9	123,4	857,8	365,9	353,3	369,5	688,2	0,18	73,75	73,83	83,09	0,18	75,32	77,23	84,27
27,0	156,0	12,6	0,2	13,0	662,2	72,0	122,2	852,9	365,3	354,6	370,6	686,2	0,18	73,81	73,84	83,15	0,18	75,39	77,38	84,29
28,0	157,0	12,4	0,2	13,0	662,9	71,8	121,8	850,1	364,7	355,8	371,8	684,2	0,18	73,85	73,90	83,22	0,18	75,46	77,50	84,29
29,0	158,0	12,2	0,2	13,0	658,5	71,7	122,2	847,2	364,2	356,9	372,8	682,4	0,18	73,88	73,93	83,28	0,18	75,48	77,63	84,25
30,0	159,0	12,0	0,2	12,8	655,5	71,6	121,1	843,9	364,0	357,9	373,8	680,7	0,18	73,95	73,96	83,34	0,18	75,54	77,74	84,27
31,0	160,0	11,8	0,2	12,6	652,8	71,6	120,7	839,4	363,9	358,9	374,8	679,0	0,18	73,93	73,99	83,42	0,18	75,59	77,81	84,24
32,0	161,0	11,6	0,2	12,5	648,2	71,6	120,3	834,9	364,0	359,7	375,8	677,4	0,18	73,92	74,02	83,50	0,18	75,62	77,88	84,18
33,0	162,0	11,4	0,2	12,4	646,4	71,6	118,8	832,6	364,2	360,6	376,9	676,0	0,18	73,97	74,17	83,54	0,18	75,82	77,95	84,14
34,0	163,0	11,2	0,2	12,2	643,7	71,6	119,6	827,0	364,5	361,3	378,0	674,4	0,18	74,03	74,27	83,58	0,18	75,92	78,09	84,14
35,0	164,0	11,0	0,2	12,1	639,8	71,8	118,8	822,4	365,0	362,0	378,8	672,9	0,18	74,03	74,29	83,61	0,18	75,91	78,22	84,14
36,0	165,0	10,8	0,2	11,9	636,4	71,9	118,1	819,4	365,4	362,5	379,5	671,5	0,18	74,02	74,26	83,67	0,18	75,91	78,30	84,13
37,0	166,0	10,6	0,2	11,8	634,3	71,9	117,4	815,8	365,9	363,1	380,0	670,2	0,18	73,99	74,27	83,71	0,18	75,88	78,37	84,12
38,0	167,0	10,5	0,2	11,8	634,4	71,7	116,3	814,2	366,4	363,5	381,2	668,9	0,18	73,96	74,24	83,67	0,18	75,86	78,47	84,08
39,0	168,0	10,3	0,2	11,9	633,1	71,6	117,4	814,7	367,0	363,9	381,9	667,7	0,18	73,95	74,32	83,65	0,18	75,98	78,59	83,98
40,0	169,0	10,2	0,1	11,8	631,8	71,6	117,6	814,1	367,7	364,4	382,8	666,6	0,18	73,94	74,32	83,59	0,18	76,02	78,65	83,76
41,0	170,0	10,0	0,1	11,9	630,9	71,9	116,4	814,4	368,3	364,6	383,1	665,6	0,18	74,02	74,35	83,57	0,18	76,06	78,73	83,70
42,0	171,0	9,8	0,1	11,8	629,6	71,4	117,5	813,4	369,1	364,9	383,4	664,6	0,18	74,15	74,49	83,56	0,18	76,15	78,82	83,77
43,0	172,0	9,6	0,1	11,8	629,0	71,6	117,9	813,3	369,8	365,2	383,8	663,7	0,18	74,04	74,44	83,57	0,18	76,08	78,91	83,78
44,0	173,0	9,4	0,1	11,8	628,9	71,4	117,2	813,5	370,8	365,2	384,3	662,8	0,18	73,88	74,44	83,58	0,18	76,00	78,99	83,70
45,0	174,0	9,3	0,1	11,9	627,3	71,2	116,9	813,6	371,8	365,7	384,8	662,1	0,18	73,82	74,48	83,58	0,18	76,01	79,02	83,68
46,0	175,0	9,2	0,1	11,8	626,8	71,3	115,8	812,9	372,7	365,8	385,1	661,3	0,18	73,73	74,48	83,54	0,18	75,99	79,01	83,58
47,0	176,0	8,9	0,1	11,7	625,8	71,4	115,7	812,4	373,7	365,9	385,3	660,6	0,18	73,69	74,45	83,49	0,18	76,00	79,06	83,50
48,0	177,0	8,8	0,1	11,7	622,1	71,4	115,8	810,6	375,1	366,1	385,7	660,0	0,18	73,68	74,47	83,49	0,18	75,94	79,11	83,39
49,0	178,0	8,6	0,1	11,6	619,0	71,3	115,4	809,4	376,3	366,2	385,9	659,4	0,18	73,66	74,41	83,46	0,18	75,87	79,13	83,26
50,0	179,0	8,5	0,1	11,4	615,9	71,6	114,8	806,0	377,7	366,1	386,2	658,9	0,18	73,67	74,45	83,44	0,18	75,91	79,18	83,18
51,0	180,0	8,3	0,1	11,3	612,3	71,5	114,0	802,7	379,4	366,3	386,5	658,5	0,18	73,64	74,48	83,40	0,18	75,94	79,19	83,07
52,0	181,0	8,2	0,1	11,2	608,9	71,4	113,0	798,2	380,9	366,2	386,6	658,1	0,18	73,64	74,48	83,33	0,18	75,96	79,17	82,95
53,0	182,0	8,1	0,1	11,0	605,5	71,4	113,6	794,9	382,8	366,3	386,8	657,8	0,18	73,66	74,50	83,27	0,18	75,98	79,19	82,82
54,0	183,0	7,9	0,1	11,0	603,8	71,3	113,6	790,5	384,7	366,3	386,9	657,5	0,18	73,64	74,49	83,22	0,18	75,90	79,21	82,80
55,0	184,0	7,8	0,1	10,9	601,2	71,6	112,8	786,5	386,7	366,2	387,0	657,3	0,18	73,64	74,51	83,18	0,18	75,92	79,20	83,60
56,0	185,0	7,6	0,1	10,8	598,4	71,4	113,1	782,3	388,7	366,1	386,9	657,1	0,18	73,66	74,48	83,15	0,18	75,91	79,22	86,25
57,0	186,0	7,5	0,1	10,8	596,4	71,5	113,1	778,5	390,6	366,0	386,9	657,0	0,18	73,57	74,46	83,12	0,18	75,84	79,22	87,12
58,0	187,0	7,3	0,1	10,7	595,5	71,4	113,3	775,8	392,7	365,8	387,0	656,9	0,18	73,59	74,51	83,08	0,18	75,88	79,23	86,85
59,0	188,0	7,2	0,1	10,7	595,4	71,1	111,1	773,2	395,0	365,8	387,2	656,7	0,18	73,55	74,48	83,01	0,18	75,84	79,22	86,50
60,0	189,0	7,1	0,1	10,8	593,8	71,3	112,3	770,8	397,5	365,5	387,0	656,7	0,18	73,59	74,49	82,91	0,18	75,81	79,21	86,34
61,0	190,0	6,9	0,1	10,8	593,9	71,0	112,1	770,2	399,9	365,2	386,9	656,6	0,18	73,65	74,45	82,84	0,18	75,83	79,27	86,19
62,0	191,0	6,8	0,1	10,9	593,5	71,3	112,1	768,6	402,5	365,0	386,8	656,7	0,18	73,62	74,39	82,82	0,18	75,77	79,32	85,84
63,0	192,0	6,6	0,1	10,8	592,5	71,0	111,3	767,3	404,9	364,6	386,8	656,7	0,18	73,60	74,43	82,75	0,18	75,83	79,34	85,59
64,0	193,0	6,5	0,1	10,8	591,4	71,2	111,1	766,3	407,1	364,4	386,7	656,8	0,18	73,52	74,38	82,74	0,18	75,81	79,37	85,31
65,0	194,0	6,4	0,1	10,7	589,6	71,0	110,3	765,4	409,1	363,9	386,5	656,9	0,18	73,44	74,39	82,68	0,18	75,82	79,39	85,01
66,0	195,0	6,3	0,1	10,6	586,7	71,0	110,7	762,7	411,0	363,8	386,3	657,0	0,18	73,36	74,39	82,62	0,18	75,74	79,40	84,77
67,0	196,0	6,1	0,1	10,5	584,2	71,0	110,2	761,3	412,6	363,6	386,3	657,1	0,18	73,32	74,39	82,57	0,18	75,69	79,37	84,51
68,0	197,0	6,0	0,1	10,4	579,6	71,0	110,7	756,5	414,3	363,4	386,3	657,2	0,18	73,34	74,39	82,51	0,18	75,69	79,36	84,36
69,0	198,0	5,9	0,0	10,0	575,7	71,1	109,8	750,9	415,2	363,4	386,2	657,4	0,18	73,33	74,38	82,46	0,18	75,66	79,35	84,11
70,0	199,0	5,7	0,0	9,9	574,4	71,2	110,4	746,1	416,0	363,5	386,3	657,7	0,18	73,34	74,39	82,42	0,18	75,66	79,37	83,88
71,0	200,0	5,7	0,0	10,0	571,9	71,2	109,5	742,5	416,7	363,3	386,1	657,9	0,18	73,34	74,39	82,36	0,18	75,66	79,35	83,64
72,0	201,0	5,5	0,0	9,9	570,4	71,2	109,0	740,6	417,7	363,5	386,0	658,1	0,18	73,36	74,42	82,33	0,18	75,66	79,33	83,43
73,0	202,0	5,4	0,0	9,8	567,9	71,0	109,0	738,3	418,8	363,6	385,7	658,4	0,18	73,31	74,43	82,25	0,18	75,65	79,26	83,23
74,0	203,0	5,3	0,0	9,7	564,2	71,2	108,0	734,2	419,9	363,7	385,3	658,5	0,18	73,32	74,44	82,21	0,18	75,72	79,23	83,01
75,0	204,0	5,2	0,0	9,7	562,6	71,2	108,5	730,2	421,5	363,6	384,7	658,7	0,18	73,31	74,45	82,12	0,18	75,73	79,24	82,79
76,0	205,0	5,1	0,0	9,6	560,4	70,9	108,4	726,8	423,2	363,3	383,9	659,0	0,18	73,27	74,42	82,05	0,18	75,64	79,22	84,37
77,0	206,0	5,0	0,1	9,4	558,8	71,1	107,8	723,8	425,3	363,3	382,8	659,1	0,18	73,23	74,37	82,02	0,18	75,58	79,26	86,70
78,0	207,0	4,9	0,1	9,3	556,7	71,0	106,7	722,7	428,0	363,3	381,7	659,2	0,18	73,23	74,33	81,95	0,18	75,59	79,26	86,92
79,0	208,0	4,8	0,1	9,4	556,3	70,9	106,8	720,3	430,8	363,4	380,2	659,4	0,18	73,21	74,32	81,88	0,18	75,58	79,26	86,43
80,0	209,0	4,7	0,1	9,4	556,0	70,9	106,1	718,4	433,5	363,2	378,6	659,4	0,18	73,21	74,30	81,82	0,18	75,56	79,26	86,04
81,0	210,0	4,6	0,1	9,4	554,7	71,0	106,4	717,0	436,0	363,5	377,0	659,5	0,18	73,17	74,29	81,79	0,18	75,55	79,21	85,60

82,0	211,0	4,4	0,1	9,4	554,4	71,0	106,9	713,7	438,1	363,6	375,6	659,5	0,18	73,13	74,29	84,79	0,18	75,59	79,18	85,27
83,0	212,0	4,4	0,1	9,4	555,0	71,1	106,6	709,8	439,9	363,7	373,9	659,5	0,18	73,16	74,30	86,68	0,18	75,66	79,16	85,05
84,0	213,0	4,3	0,1	9,5	556,7	71,0	105,8	708,9	441,5	363,6	372,4	659,4	0,18	73,14	74,26	86,39	0,18	75,60	79,13	84,75
85,0	214,0	4,1	0,1	9,6	556,0	71,0	106,9	707,6	443,2	363,6	371,1	659,4	0,18	73,12	74,27	85,90	0,18	75,54	79,15	84,38
86,0	215,0	4,1	0,1	9,6	551,6	70,7	104,0	702,5	444,8	363,0	369,7	659,4	0,18	73,10	74,25	85,33	0,18	75,49	79,10	84,06
87,0	216,0	4,0	0,1	9,0	542,1	71,0	105,5	699,5	446,4	363,0	368,7	659,3	0,18	73,09	74,23	84,70	0,18	75,48	79,15	83,84
88,0	217,0	3,9	0,1	8,2	531,4	71,0	104,9	691,0	448,1	362,5	367,7	659,2	0,18	73,17	74,31	84,26	0,18	75,51	79,12	83,75
89,0	218,0	3,9	0,2	7,6	523,2	71,0	104,6	683,6	450,0	361,9	366,8	659,1	0,18	73,23	74,33	83,85	0,18	75,62	79,19	83,67
90,0	219,0	3,8	0,2	7,2	517,6	70,9	104,9	676,0	452,0	361,0	365,7	659,1	0,18	73,20	74,30	83,57	0,18	75,59	79,28	83,45
91,0	220,0	3,7	0,3	7,1	511,7	71,0	103,9	666,8	453,8	360,1	364,5	659,0	0,18	73,15	74,28	83,21	0,18	75,54	79,30	83,14
92,0	221,0	3,6	0,2	7,0	506,7	70,7	103,5	659,6	455,6	359,1	363,3	659,1	0,18	73,12	74,27	82,88	0,18	75,51	79,28	82,88
93,0	222,0	3,5	0,3	6,9	502,3	70,7	103,6	652,1	457,0	358,0	361,9	659,0	0,18	73,05	74,24	82,60	0,18	75,46	79,27	82,66
94,0	223,0	3,5	0,3	6,8	497,8	70,7	102,8	644,7	458,3	356,7	360,5	659,0	0,18	73,03	74,25	82,29	0,18	75,46	79,29	84,52
95,0	224,0	3,5	0,3	6,7	494,5	70,7	102,2	638,1	459,5	355,1	358,6	659,0	0,18	73,01	74,17	82,02	0,18	75,37	79,25	86,71
96,0	225,0	3,4	0,3	6,6	490,9	70,7	101,8	631,8	460,5	353,7	356,8	659,0	0,18	72,98	74,09	81,77	0,18	75,32	79,25	86,93
97,0	226,0	3,4	0,3	6,5	486,3	70,8	101,4	625,0	461,5	352,0	355,0	659,0	0,18	72,97	74,12	81,78	0,18	75,36	79,26	86,43
98,0	227,0	3,3	0,3	6,4	482,3	70,7	102,0	619,1	462,4	350,6	353,0	659,0	0,18	72,95	74,15	86,25	0,18	75,38	79,22	85,99
99,0	228,0	3,2	0,3	6,2	476,8	70,6	100,6	612,6	463,3	348,8	350,7	659,1	0,18	72,89	74,11	87,34	0,18	75,34	79,19	85,65
100,0	229,0	3,2	0,3	6,0	470,7	70,8	99,5	605,4	464,3	347,3	348,5	659,1	0,18	72,88	74,10	86,64	0,18	75,29	79,19	85,13
101,0	230,0	3,1	0,4	5,7	464,5	70,6	98,6	598,9	465,3	345,6	346,5	659,1	0,18	72,79	74,03	85,91	0,18	75,20	79,15	84,68
102,0	231,0	3,1	0,3	5,5	458,2	70,7	98,3	591,1	466,5	343,9	344,3	659,1	0,18	72,73	73,96	85,20	0,18	75,17	79,14	84,25
103,0	232,0	3,1	0,4	5,4	454,2	70,5	98,1	584,0	467,8	342,1	342,1	659,2	0,18	72,70	73,95	84,61	0,18	75,14	79,14	83,89
104,0	233,0	3,0	0,4	5,4	451,4	70,5	98,2	576,7	469,4	340,3	339,8	659,2	0,18	72,62	73,90	84,01	0,18	75,08	79,13	83,53
105,0	234,0	3,0	0,4	5,4	447,7	70,3	97,3	570,9	470,8	338,1	337,5	659,2	0,18	72,60	73,86	83,51	0,18	75,02	79,09	83,16
106,0	235,0	2,9	0,4	5,4	445,9	70,3	96,9	565,4	472,2	336,0	335,1	659,2	0,18	72,56	73,79	83,04	0,18	74,95	79,07	82,88
107,0	236,0	2,9	0,4	5,4	443,3	70,5	96,4	560,3	473,4	333,8	333,0	659,2	0,18	72,50	73,75	82,62	0,18	74,89	79,08	83,18
108,0	237,0	2,8	0,4	5,4	442,1	70,4	96,3	556,4	474,2	331,5	330,8	659,1	0,18	72,47	73,68	82,16	0,18	74,82	79,06	85,45
109,0	238,0	2,8	0,4	5,5	442,7	70,5	95,8	553,1	474,8	329,3	328,8	659,0	0,18	72,41	73,63	81,82	0,18	74,78	79,05	86,73
110,0	239,0	2,7	0,3	5,6	441,3	70,5	96,2	550,9	475,5	327,1	326,6	658,9	0,18	72,41	73,60	81,42	0,18	74,72	79,02	86,33
111,0	240,0	2,7	0,3	5,6	439,5	70,4	96,7	547,2	476,0	324,9	324,8	658,7	0,18	72,40	73,55	84,12	0,18	74,69	79,00	85,81
112,0	241,0	2,7	0,3	5,6	436,6	70,4	96,2	544,7	476,5	322,7	322,8	658,5	0,18	72,39	73,58	87,26	0,18	74,72	78,92	85,37
113,0	242,0	2,6	0,3	5,4	433,7	70,2	95,6	540,5	476,9	320,3	321,1	658,2	0,18	72,34	73,55	86,89	0,18	74,69	78,86	84,85
114,0	243,0	2,6	0,3	5,3	427,4	70,2	95,1	537,1	477,3	318,1	319,4	658,0	0,18	72,30	73,52	86,05	0,18	74,66	78,82	84,34
115,0	244,0	2,5	0,4	4,9	419,4	70,4	93,9	530,1	477,6	315,9	317,7	657,6	0,18	72,28	73,53	85,31	0,18	74,63	78,76	83,93
116,0	245,0	2,5	0,5	4,6	411,4	70,3	94,1	523,1	477,3	313,9	315,8	657,3	0,18	72,28	73,52	84,63	0,18	74,59	78,76	83,65
117,0	246,0	2,5	0,5	4,3	408,3	70,3	93,6	516,0	476,9	311,8	314,2	656,8	0,18	72,25	73,57	83,97	0,18	74,60	78,77	83,37
118,0	247,0	2,5	0,5	4,2	403,2	70,2	93,4	509,8	476,0	309,5	312,3	656,5	0,18	72,20	73,57	83,40	0,18	74,54	78,76	83,03
119,0	248,0	2,4	0,5	4,1	399,0	70,1	93,4	502,5	474,6	307,6	310,7	656,1	0,18	72,14	73,57	82,88	0,18	74,51	78,73	83,17
120,0	249,0	2,4	0,6	4,0	394,8	69,9	92,1	496,5	473,0	305,4	308,7	655,7	0,18	72,05	73,53	82,36	0,18	74,43	78,73	85,40
121,0	250,0	2,4	0,6	4,0	389,9	69,8	92,3	490,0	471,5	303,5	306,7	655,4	0,18	72,04	73,51	81,94	0,18	74,38	78,72	86,93
122,0	251,0	2,4	0,6	3,9	385,8	69,9	91,8	484,8	469,9	301,4	304,6	655,0	0,18	72,02	73,49	81,50	0,18	74,36	78,75	86,76
123,0	252,0	2,3	0,6	3,9	381,1	69,9	92,0	478,5	468,6	299,4	302,6	654,7	0,18	71,98	73,48	84,13	0,18	74,40	78,72	86,25
124,0	253,0	2,3	0,6	3,9	377,6	69,8	91,1	472,6	467,4	297,4	300,5	654,3	0,18	71,91	73,46	87,03	0,18	74,36	78,69	85,75
125,0	254,0	2,3	0,6	3,9	374,6	69,8	91,1	467,4	466,2	295,5	298,3	653,9	0,18	71,86	73,43	86,58	0,18	74,32	78,61	85,20
126,0	255,0	2,3	0,6	3,9	371,1	70,0	90,1	462,1	465,0	293,2	296,2	653,6	0,18	71,87	73,49	85,76	0,18	74,36	78,62	84,66
127,0	256,0	2,2	0,6	3,8	367,6	69,8	90,4	457,0	463,7	291,4	294,0	653,2	0,18	71,90	73,52	84,89	0,18	74,37	78,60	84,34
128,0	257,0	2,2	0,6	3,8	364,8	69,9	90,1	452,2	462,2	289,4	291,8	652,9	0,18	71,88	73,49	84,16	0,18	74,29	78,62	84,00
129,0	258,0	2,2	0,6	3,7	361,7	69,8	89,8	448,0	461,0	287,5	289,6	652,5	0,18	71,87	73,47	83,49	0,18	74,23	78,65	83,71
130,0	259,0	2,2	0,6	3,7	359,4	69,6	89,2	443,4	459,9	285,7	287,4	652,2	0,18	71,82	73,40	82,89	0,18	74,21	78,73	83,32
131,0	260,0	2,2	0,6	3,7	357,2	69,5	88,7	439,2	458,9	283,9	285,3	651,8	0,18	71,74	73,31	82,40	0,18	74,15	78,70	82,90
132,0	261,0	2,1	0,6	3,6	354,4	69,6	88,1	434,9	457,8	282,1	283,2	651,5	0,18	71,67	73,27	81,92	0,18	74,15	78,66	83,84
133,0	262,0	2,1	0,6	3,6	352,3	69,5	88,2	430,9	456,6	280,3	281,1	651,1	0,18	71,61	73,19	81,48	0,18	74,06	78,64	85,89
134,0	263,0	2,1	0,6	3,6	349,7	69,4	88,9	427,1	455,2	278,7	279,0	650,7	0,18	71,53	73,14	83,56	0,18	74,00	78,61	86,74
135,0	264,0	2,1	0,5	3,6	348,1	69,6	87,9	424,2	454,2	276,8	276,8	650,4	0,18	71,45	73,10	86,83	0,18	73,96	78,56	86,31
136,0	265,0	2,1	0,5	3,5	345,2	69,4	87,3	420,5	452,9	275,0	274,8	650,0	0,18	71,47	73,07	86,45	0,18	73,91	78,57	85,81
137,0	266,0	2,1	0,6	3,4	342,8	69,5	87,3	417,1	451,5	273,6	272,9	649,7	0,18	71,44	73,04	85,58	0,18	73,98	78,64	85,28
138,0	267,0	2,0	0,6	3,4	341,3	69,5	87,5	413,6	450,0	271,7	271,0	649,2	0,18	71,44	73,02	84,81	0,18	73,93	78,66	84,72
139,0	268,0	2,0	0,6	3,4	339,0	69,2	87,6	411,1	448,6	270,4	269,1	648,8	0,18	71,37	73,01	84,08	0,18	73,83	78,65	84,28
140,0	269,0	2,0	0,6	3,4	337,3	69,3	87,2	408,1	447,7	268,7	267,2	648,3	0,18	71,27	72,95	83,42	0,18	73,74	78,57	83,82
141,0	270,0	2,0	0,5	3,4	335,7	69,4	87,0	405,0	446,6	267,2	265,3	647,9	0,18	71,26	72,91	82,85	0,18	73,74	78,57	83,32
142,0	271,0	2,0	0,5	3,4	333,0	69,5	87,1	402,2	445,7	265,5	263,4	647,4	0,18	71,31	72,89	82,35	0,18	73,73	78,50	82,97
143,0	272,0	1,9	0,5	3,4	332,1	69,7	86,9	398,7	444,8	264,1	261,9	646,8	0,18	71,34	72,89	81,83	0,18	73,77	78,49	84,79
144,0	273,0	1,9	0,5	3,4	330,6	69,6	86,8	396,6	444,0	262,4	260,1	646,3	0,18	71,39	72,98	81,34	0,18	73,87	78,47	86,59
145,0	274,0	1,9	0,6	3,3	329,1	69,4	86,6	393,0	443,2	261,0	258,5	645,7	0,18	71,40	73,01	84,12	0,18	73,88	78,45	86,49
146,0	275,0	1,9	0,6	3,3	326,9	69,5	86,7	390,5	442,5	259,6	256,8	645,0	0,18	71,44	73,06	86,70	0,18	73,96	78,44	86,00
147,0	276,0	1,9	0,6	3,3	324,9	69,5	86,0	389,0	441,8	258,2	255,2	644,3	0,18	71,43	73,12	86,11	0,18	73,95	78,44	85,53
148,0	277,0	1,8	0,6	3,3	323,9	69,4	85,5	386,6	441,3	256,8	253,7	643,6	0,18	71,39	73,09	85,15	0,18	73,91	78,35	85,05
149,0	278,0	1,8	0,6	3,3	322,8	69,6	85,4	384,6	440,8	255,4	252,2	642,8	0,18	71,40	73,06	84,29	0,18	73,89	78,32	84,62
150,0	279,0	1,8	0,6	3,3	321,0	69,6	85,1	382,9	440,3	254,1	250,7	642,1	0,18	71,37	73,03	83,59	0,18	73,83	78,39	84,17
151,0	280,0	1,7	0,6	3,3	320,3	69,7	84,9	380,3	440,0	252,7	249,2	641,3	0,18	71,37	73,08	82,92	0,18	73,85	78,43	83,74
152,0	281,0	1,7	0,6	3,3	318,7	69,5	85,8	377,6	439,7	251,4	247,8	640,5	0,18	71,42	73,12	82,23	0,18	73,90	78,44	83,32
153,0	282,0	1,7	0,6	3,3	317,3	69,5	85,4	376,6	439,5	249,9	246,2	639,8	0,18	71,41	73,11	81,72	0,18	73,89	78,38	82,86
154,0	283,0	1,7	0,6	3,3	316,5	69,4	84,9	374,0	439,3	248,6	244,9	639,0	0,18	71,39	73,06	82,10	0,18	73,81	78,32	83,14
155,0	284,0	1,6	0,6	3,3	314,9	69,4	84,9	371,8	438,9	247,3	243,5	638,2	0,18	71,28	73,00	86,10	0,18	73,73	78,27	85,32
156,0	285,0	1,7	0,6	3,3	313,6	69,3	84,2	370,5	438,7	246,0	242,1	637,5	0,18	71,21	72,94	86,47	0,18	73,63	78,27	86,91
157,0	286,0	1,7	0,6	3,3	312,8	69,3	83,5	369,2	438,5	244,7	240,8	636,7	0,18	71,17	72,93	85,60	0,18	73,64	78,27	86,71
158,0	287,0	1,6	0,6	3,3	311,9	69,3	84,1	366,8	438,3	243,5	239,5	636,0	0,18	71,11	72,85	84,74	0,18	73,58	78,29	86,17
159,0	288,0	1,6	0,6	3,3	310,9	69,3	83,9	365,6	438,0	242,3	238,2	635,2	0,18	71,09	72,82	84,00	0,18	73,57	78,30	85,56
160,0	289,0	1,6	0,6	3,3	310,4	69,3	84,1	364,2	437,7	241,2	236,9	634,5	0,18	71,08	72,78	83,33	0,18	73,55	78,35	84,98
161,0	290,0	1,5	0,6	3,3	309,5	69,3	84,2	362,9	437,4	240,0	235,7	633,7	0,18	71,10	72,75	82,72	0,18	73,53	78,32	84,51
162,0	291,0	1,5	0,6	3,3	309,0	69,3	83,8	361,5	437,0	239,0	234,6	633,0	0,18	71,11	72,77	82,17	0,18	73,57	78,33	84,08
163,0	292,0	1,5	0,6	3,3	307,9	69,2	83,5	360,3	436,5	237,8	233,5	632,3	0,18	71,10	72,73	81,62	0,18	73,56	78,28	83,59
164,0	293,0	1,5	0,6	3,3	307,3	69,1	83,5	358,4	435,9	236,7	232,3	631,4	0,18	71,05	72,70	84,50	0,18	73,55	78,27	83,13
165,0	294,0	1,5	0,6	3,3	306,4	69,1	83,3	357,0	435,4	235,7	231,2	630,7	0,18	70,99	72,67	87,11	0,18	73,49	78,23	82,76
166,0	295,0	1,5	0,6	3,3	305,5	69,1	83,3	355,4	435,2	234,6	230,1	630,0	0,18	70,97	72,66	86,54	0,18	73,50	78,22	84,45
167,0	296,0	1,4	0,5	3,2	304,6	69,2	83,4	354,2	434,9	233,6	229,1	629,2	0,18	70,96	72,62	85,67	0,18	73,43	78,23	86,38

168,0	297,0	1,4	0,6	3,3	303,6	69,4	83,5	353,4	434,9	232,8	228,0	628,5	0,18	71,00	72,61	84,81	0,18	73,40	78,23	86,65
169,0	298,0	1,4	0,6	3,3	303,6	69,3	83,2	351,9	434,8	231,8	227,0	627,8	0,18	71,06	72,66	84,06	0,18	73,49	78,26	86,21
170,0	299,0	1,4	0,6	3,3	302,7	69,2	82,7	351,0	434,8	231,0	225,9	627,0	0,18	71,04	72,68	83,31	0,18	73,53	78,22	85,67
171,0	300,0	1,4	0,6	3,3	302,1	69,2	83,4	350,4	434,9	230,2	224,9	626,3	0,18	71,04	72,72	82,64	0,18	73,50	78,17	85,15
172,0	301,0	1,3	0,5	3,2	300,9	69,1	82,9	348,7	435,2	229,3	224,0	625,5	0,18	71,03	72,71	82,03	0,18	73,49	78,15	84,67
173,0	302,0	1,3	0,5	3,2	300,4	69,1	82,5	347,4	435,4	228,6	223,1	624,8	0,18	70,95	72,65	81,49	0,18	73,45	78,15	84,17
174,0	303,0	1,3	0,5	3,2	299,6	69,0	83,0	346,2	435,6	227,9	222,2	623,9	0,18	70,91	72,60	83,69	0,18	73,39	78,12	83,68
175,0	304,0	1,3	0,6	3,2	298,7	69,0	83,0	345,4	436,3	227,0	221,3	623,2	0,18	70,85	72,53	86,80	0,18	73,35	78,07	83,20
176,0	305,0	1,3	0,5	3,2	298,3	69,0	82,3	344,3	436,8	226,3	220,3	622,4	0,18	70,83	72,53	86,36	0,18	73,35	78,07	82,76
177,0	306,0	1,3	0,6	3,2	297,7	68,9	82,2	343,6	437,4	225,5	219,5	621,6	0,18	70,81	72,49	85,42	0,18	73,32	78,04	83,90
178,0	307,0	1,2	0,6	3,3	297,4	69,1	82,7	342,0	437,9	224,7	218,7	620,7	0,18	70,81	72,45	84,56	0,18	73,33	78,11	85,81
179,0	308,0	1,2	0,6	3,2	296,6	69,1	82,6	341,5	438,4	223,9	217,8	619,9	0,18	70,81	72,41	83,90	0,18	73,32	78,12	86,77
180,0	309,0	1,2	0,6	3,3	296,1	69,0	82,7	340,4	439,0	223,4	217,0	619,0	0,18	70,83	72,43	83,21	0,18	73,33	78,15	86,32
181,0	310,0	1,2	0,6	3,3	295,8	69,1	82,6	339,4	439,5	222,7	216,2	618,1	0,18	70,86	72,45	82,59	0,18	73,32	78,09	85,79
182,0	311,0	1,2	0,6	3,3	295,0	69,2	82,4	338,5	440,1	222,0	215,4	617,2	0,18	70,87	72,46	82,05	0,18	73,34	78,08	85,28
183,0	312,0	1,1	0,6	3,3	294,7	69,2	82,4	337,9	440,5	221,3	214,7	616,3	0,18	70,90	72,49	81,45	0,18	73,37	78,09	84,78
184,0	313,0	1,1	0,6	3,2	294,3	69,0	82,2	337,0	440,7	220,7	214,0	615,4	0,18	70,86	72,44	84,25	0,18	73,34	78,08	84,26
185,0	314,0	1,1	0,6	3,3	293,9	69,2	82,3	335,9	441,2	220,1	213,3	614,5	0,18	70,88	72,49	86,78	0,18	73,35	78,05	83,75
186,0	315,0	1,1	0,6	3,2	293,3	69,2	82,1	335,7	441,8	219,5	212,6	613,6	0,18	70,87	72,53	86,10	0,18	73,39	78,02	83,31
187,0	316,0	1,0	0,6	3,2	291,5	69,0	81,9	334,6	442,3	218,9	211,9	612,6	0,18	70,87	72,51	85,18	0,18	73,34	78,00	82,89
188,0	317,0	1,1	0,5	3,1	291,4	69,0	81,7	333,8	442,7	218,3	211,3	611,8	0,18	70,83	72,48	84,35	0,18	73,30	77,95	83,21
189,0	318,0	1,0	0,5	3,1	290,6	69,0	80,9	333,3	443,1	217,8	210,7	611,0	0,18	70,76	72,49	83,60	0,18	73,35	77,95	85,12
190,0	319,0	1,0	0,6	3,1	289,9	69,1	81,3	331,8	443,7	217,2	210,0	610,1	0,18	70,79	72,56	82,84	0,18	73,43	77,97	86,70
191,0	320,0	1,0	0,5	3,0	288,7	69,2	81,8	331,0	444,2	216,7	209,4	609,3	0,18	70,81	72,66	82,02	0,18	73,51	77,99	86,58
192,0	321,0	1,0	0,5	3,0	287,6	68,8	81,8	329,7	444,6	216,4	208,8	608,4	0,18	70,78	72,69	81,63	0,18	73,51	77,94	86,03
193,0	322,0	1,0	0,5	3,0	287,8	69,2	81,8	329,2	445,3	215,7	208,2	607,6	0,18	70,76	72,67	85,54	0,18	73,50	77,90	85,39
194,0	323,0	0,9	0,6	3,0	287,4	69,0	81,5	328,5	446,0	215,1	207,5	606,7	0,18	70,81	72,78	86,84	0,18	73,58	77,86	84,81
195,0	324,0	0,9	0,6	3,0	286,6	68,9	81,3	328,4	446,8	214,6	206,8	605,7	0,18	70,62	72,86	85,85	0,18	73,40	77,87	84,28
196,0	325,0	0,9	0,5	3,0	286,2	68,9	80,8	327,9	447,7	214,1	206,3	604,7	0,18	70,45	72,90	84,83	0,18	73,29	77,85	83,75
197,0	326,0	0,9	0,5	3,0	285,4	68,9	80,7	326,5	448,7	213,6	205,7	603,8	0,18	70,40	72,85	83,88	0,18	73,22	77,81	83,22
198,0	327,0	0,9	0,5	3,0	285,4	69,0	81,1	325,7	449,3	212,8	205,1	602,9	0,18	70,43	72,80	83,14	0,18	73,29	77,87	82,76
199,0	328,0	0,8	0,5	3,0	284,7	68,9	80,9	324,8	449,7	212,2	204,5	601,9	0,18	70,36	72,76	82,43	0,18	73,15	77,91	83,34
200,0	329,0	0,8	0,5	3,0	284,1	68,4	81,2	323,8	450,1	211,6	203,9	600,9	0,18	70,26	72,74	81,67	0,18	73,02	77,89	85,22
201,0	330,0	0,8	0,5	3,0	283,6	68,6	80,9	322,6	450,5	210,8	203,4	600,0	0,18	70,21	72,58	82,52	0,18	72,86	77,81	86,84
202,0	331,0	0,8	0,5	3,0	283,8	68,4	80,5	322,2	451,1	210,5	202,8	599,0	0,18	70,12	72,53	86,41	0,18	72,79	77,76	86,58
203,0	332,0	0,8	0,5	3,0	283,4	68,6	80,4	322,3	451,9	209,6	202,3	598,1	0,18	70,09	72,42	86,53	0,18	72,74	77,78	85,96
204,0	333,0	0,8	0,5	3,0	282,8	68,5	80,6	321,7	452,6	209,0	201,7	597,2	0,18	70,04	72,33	85,56	0,18	72,63	77,76	85,39
205,0	334,0	0,7	0,5	3,0	282,6	68,4	81,2	320,3	453,1	208,5	201,3	596,2	0,18	70,05	72,25	84,62	0,18	72,58	77,69	84,81
206,0	335,0	0,7	0,5	3,0	281,4	68,5	80,9	319,9	453,9	207,9	200,8	595,4	0,18	70,08	72,15	83,82	0,18	72,54	77,63	84,30
207,0	336,0	0,7	0,5	3,0	281,1	68,5	80,6	318,9	454,6	207,4	200,4	594,5	0,18	70,08	72,06	83,04	0,18	72,51	77,58	83,80
208,0	337,0	0,7	0,5	3,0	280,3	68,7	80,4	318,8	455,5	206,8	199,7	593,7	0,18	70,08	72,04	82,41	0,18	72,47	77,49	83,31
209,0	338,0	0,7	0,5	3,0	280,3	68,8	80,2	317,6	456,3	206,2	199,2	592,9	0,18	70,08	72,05	81,77	0,18	72,47	77,47	82,79
210,0	339,0	0,7	0,5	3,0	279,8	68,5	80,7	316,6	456,9	205,8	198,8	592,0	0,18	70,07	72,05	82,71	0,18	72,46	77,47	83,25
211,0	340,0	0,6	0,5	3,0	279,7	68,7	80,3	316,6	457,8	205,2	198,2	591,1	0,18	70,02	71,94	86,19	0,18	72,37	77,40	85,27
212,0	341,0	0,6	0,5	3,0	278,9	68,6	80,2	315,8	458,5	204,6	197,7	590,3	0,18	69,92	71,97	86,08	0,18	72,25	77,40	86,77
213,0	342,0	0,6	0,5	3,0	278,5	68,2	80,5	315,3	459,2	204,1	197,4	589,4	0,18	69,78	71,92	85,16	0,18	72,14	77,38	86,62
214,0	343,0	0,6	0,5	3,0	278,2	68,4	80,2	314,6	459,8	203,6	196,9	588,6	0,18	69,74	71,83	84,27	0,18	72,08	77,36	86,02
215,0	344,0	0,6	0,5	3,0	278,2	68,2	80,0	313,6	460,4	202,9	196,5	587,7	0,18	69,74	71,75	83,49	0,18	72,07	77,32	85,41
216,0	345,0	0,6	0,5	3,0	277,4	68,4	80,2	313,2	461,0	202,3	196,1	586,9	0,18	69,75	71,67	82,80	0,18	72,09	77,23	84,83
217,0	346,0	0,5	0,5	3,0	276,3	68,3	80,3	312,1	461,8	202,1	195,7	586,1	0,18	69,80	71,63	82,11	0,18	72,16	77,28	84,28
218,0	347,0	0,5	0,5	3,0	276,1	68,5	80,3	311,6	462,6	201,6	195,4	585,4	0,18	69,84	71,62	81,56	0,18	72,22	77,32	83,71
219,0	348,0	0,5	0,5	2,9	275,6	68,6	81,0	311,0	462,9	201,2	195,1	584,6	0,18	69,94	71,60	85,02	0,18	72,30	77,32	83,13
220,0	349,0	0,5	0,5	3,0	275,1	68,4	81,0	310,6	463,4	200,7	194,7	583,9	0,18	70,01	71,58	87,03	0,18	72,34	77,36	82,97
221,0	350,0	0,5	0,5	2,9	274,8	68,7	80,3	309,7	463,4	200,2	194,4	583,2	0,18	70,03	71,53	86,34	0,18	72,33	77,37	84,82
222,0	351,0	0,5	0,5	2,9	274,0	68,7	80,6	308,8	463,5	199,6	194,1	582,5	0,18	70,10	71,51	85,35	0,18	72,39	77,44	86,67
223,0	352,0	0,4	0,5	2,9	273,5	68,7	80,9	308,4	463,6	199,1	193,8	581,8	0,18	70,11	71,48	84,47	0,18	72,39	77,37	86,62
224,0	353,0	0,4	0,5	2,9	273,2	68,7	80,3	307,9	463,4	198,7	193,6	581,2	0,18	70,15	71,48	83,72	0,18	72,38	77,32	86,07
225,0	354,0	0,4	0,5	2,9	272,6	68,4	80,2	306,5	463,2	198,1	193,3	580,6	0,18	70,08	71,44	83,02	0,18	72,33	77,31	85,44
226,0	355,0	0,4	0,5	2,8	272,2	68,3	80,7	306,4	462,4	197,7	193,1	579,9	0,18	70,01	71,39	82,40	0,18	72,25	77,28	84,79
227,0	356,0	0,4	0,5	2,8	271,3	68,3	80,4	305,3	462,0	197,2	192,8	579,3	0,18	69,93	71,33	81,79	0,18	72,20	77,27	84,20
228,0	357,0	0,4	0,5	2,8	270,7	68,3	80,7	305,1	461,3	196,6	192,5	578,7	0,18	69,89	71,29	82,52	0,18	72,16	77,18	83,58
229,0	358,0	0,3	0,5	2,8	270,3	68,4	81,2	304,6	460,5	196,1	192,3	578,1	0,18	69,87	71,24	86,60	0,18	72,13	77,12	83,02
230,0	359,0	0,4	0,5	2,8	270,0	68,3	80,5	303,7	459,9	195,6	192,0	577,5	0,18	69,86	71,21	86,82	0,18	72,12	77,19	82,73
231,0	360,0	0,3	0,5	2,8	269,3	68,4	81,0	303,2	459,2	195,2	191,8	576,9	0,18	69,87	71,17	85,87	0,18	72,13	77,19	84,48
232,0	361,0	0,3	0,5	2,8	269,0	68,5	80,6	302,1	458,7	194,7	191,7	576,3	0,18	69,92	71,17	84,99	0,18	72,13	77,19	86,39
233,0	362,0	0,3	0,5	2,8	268,5	68,5	80,8	301,5	458,3	194,1	191,4	575,7	0,18	69,95	71,18	84,13	0,18	72,17	77,17	86,70
234,0	363,0	0,3	0,5	2,8	268,5	68,6	80,2	300,9	458,0	193,6	191,2	575,1	0,18	69,95	71,16	83,39	0,18	72,16	77,10	86,12
235,0	364,0	0,2	0,5	2,8	267,7	68,4	80,9	300,6	457,7	193,1	191,0	574,5	0,18	69,95	71,14	82,71	0,18	72,09	77,00	85,53
236,0	365,0	0,3	0,5	2,8	267,5	68,5	80,9	300,2	457,4	192,6	190,8	574,0	0,18	69,92	71,13	82,16	0,18	72,10	76,91	84,87
237,0	366,0	0,2	0,5	2,8	266,9	68,4	80,0	299,1	457,1	192,2	190,5	573,4	0,18	69,91	71,12	81,55	0,18	72,06	76,89	84,32
238,0	367,0	0,2	0,5	2,8	266,8	68,5	80,0	298,7	457,1	191,7	190,2	572,9	0,18	69,83	71,06	83,19	0,18	72,07	76,97	83,72
239,0	368,0	0,2	0,5	2,8	266,4	68,2	80,1	298,3	457,0	191,4	190,0	572,3	0,18	69,81	71,04	86,71	0,18	72,07	77,01	83,15
240,0	369,0	0,2	0,5	2,9	266,5	68,2	79,8	297,5	456,9	190,9	189,8	571,7	0,18	69,74	71,00	86,42	0,18	72,05	77,08	82,84
241,0	370,0	0,2	0,5	2,9	266,1	68,1	79,8	297,3	456,8	190,6	189,6	571,2	0,18	69,73	70,96	85,47	0,18	71,98	77,11	84,70
242,0	371,0	0,2	0,5	2,9	265,7	68,2	80,3	296,9	456,8	190,1	189,4	570,6	0,18	69,69	70,98	84,56	0,18	71,91	77,10	86,59
243,0	372,0	0,1	0,5	2,9	265,4	68,3	80,2	296,3	456,8	189,7	189,3	570,0	0,18	69,68	70,95	83,75	0,18	71,91	77,08	86,54
244,0	373,0	0,1	0,5	2,9	265,8	68,2	79,5	295,9	456,8	189,3	189,2	569,6	0,18	69,68	70,92	83,03	0,18	71,95	77,09	85,96
245,0	374,0	0,1	0,5	2,9	265,4	68,3	79,8	295,7	456,9	188,9	188,9	569,0	0,18	69,66	70,90	82,38	0,18	71,93	77,13	85,37
246,0	375,0	0,1	0,5	2,9	264,8	68,3	79,9	294,9	456,9	188,4	188,7	568,5	0,18	69,67	70,90	81,76	0,18	71,93	77,14	84,79
247,0	376,0	0,1	0,5	2,9	264,9	68,2	79,5	294,8	457,1	188,1	188,6	568,0	0,18	69,66	70,87	81,84	0,18	71,93	77,15	84,20
248,0	377,0	0,1	0,5	2,9	264,5	68,3	79,5	294,3	457,3	187,8	188,4	567,6	0,18	69,62	70,84	85,88	0,18	71,90	77,14	83,61
249,0	378,0	0,1	0,5	2,9	264,7	68,2	79,6	294,4	457,5	187,4	188,3	567,1	0,18	69,61	70,81	86,69	0,18	71,87	77,18	83,09
250,0	379,0	0,0	0,5	2,9	264,3	68,1	79,7	294,2	457,8	187,0	188,1	566,6	0,18	69,63	70,80	85,81	0,18	71,90	77,19	82,65

Manufacturer: JOTUL
Model: F35

Run: 2
Project #: pi 20250
Test Duration: 250,00 min

	HHV	LHV
Eff	68,24%	73,43%
Comb Eff	97,77%	97,77%
HT Eff	69,80%	75,10%
Output	23 367	kJ/h
Burn Rate	1,69	kg/h
Grams CO	255	g
Input	34 243	kJ/h
MC wet	17,57	

Note: In the “Input data”, "Calc. % O_2", "Fuel Properties", and “Mass Balance” columns, [e], [d], [g], [a]. [b], [c], [h], [u], [w], [j], and [k] refer to their respective variables in Clauses 13.7.3

	Ultimate CO_2
$CO_{2\text{-}ult}$	19,86
	F_0
	1,048

Overall Heating Efficiency:	68,24%	
Combustion Efficiency:	97,77%	
Heat Transfer Efficiency:	69,80%	

Air Fuel Ratio (A/F)	
Dry Molecular Weight (M_d)	29,59
Dry Moles Exhaust Gas (N_r):	522,25
Air Fuel Ratio (A/F)	14,94

Heat Output:	22 166	Btu/h	23 367	kJ/h
Heat Input:	32 483	Btu/h	34 243	kJ/h
Burn Duration:	4,17	h		
Burn Rate:	3,73	lb/h	1,695	kg/h
Stack Temp:	433,3	Deg. F	222,9	Deg. C

APPENDIX 2: Proportionality results

Average	Average	Average	Proportional	Highfire				Average
17,60	Inlet +	Inlet +						0,266
	Outlet	Outlet	Average	Average	#1	#2		
Tunnel	Temp.	Temp.	100,91	103,01	System 1	System 2		SQRT
Velocity	Meter 1	Meter 2	**Proportional Rates**		Vol.Std.	Vol.Std.		Delta-P
			PR1	**PR2**			Time	
Ft/Sec	Deg. R	Deg. R	**%**	**%**	(ft3)	(ft3)	min	(in H2O)2
16,981	526,7	528,3			0,183	0,182	0	0,2685493
17,432	526,8	528,3	94,04	96,31	0,183	0,182	1	0,2743781
17,400	526,8	528,3	94,56	96,72	0,183	0,182	2	0,2734817
17,315	526,7	528,3	94,71	96,93	0,183	0,182	3	0,2727246
17,452	526,8	528,4	93,96	96,30	0,183	0,182	4	0,2747801
17,573	526,7	528,4	93,64	95,49	0,183	0,182	5	0,2762707
17,296	526,7	528,4	95,77	97,95	0,183	0,182	6	0,2712105
17,274	526,7	528,4	96,66	98,92	0,183	0,182	7	0,2695073
17,353	526,7	528,5	97,00	99,32	0,183	0,182	8	0,2698878
17,015	526,8	528,5	99,39	101,60	0,183	0,182	9	0,2639284
17,421	526,8	528,6	97,56	99,61	0,183	0,182	10	0,2695017
17,571	526,8	528,7	97,56	99,67	0,183	0,182	11	0,2708318
17,524	526,8	528,7	97,87	100,02	0,183	0,182	12	0,2698818
17,532	526,8	528,8	98,53	100,81	0,183	0,182	13	0,2689313
17,473	526,9	528,9	99,38	101,45	0,183	0,182	14	0,2676478
17,438	526,9	528,9	99,65	101,91	0,183	0,182	15	0,2668242
17,452	526,9	528,9	100,46	102,89	0,183	0,182	16	0,2658747
17,317	527,0	529,0	102,22	104,53	0,183	0,182	17	0,2625603
17,418	527,1	529,2	102,30	104,58	0,183	0,182	18	0,2631456
17,472	527,2	529,4	102,24	104,64	0,183	0,182	19	0,2635358
17,313	527,4	529,6	103,11	105,45	0,183	0,182	20	0,2613772
17,468	527,6	529,8	102,03	104,10	0,183	0,182	21	0,2639225
17,282	527,7	530,0	103,01	105,20	0,183	0,182	22	0,2611902
17,464	527,9	530,2	101,77	104,38	0,183	0,182	23	0,2639265
17,438	528,0	530,4	102,17	104,17	0,183	0,182	24	0,2634197
17,467	528,2	530,6	101,95	104,03	0,183	0,182	25	0,2639273
17,244	528,4	530,8	108,57	110,90	0,183	0,182	26	0,2540255
17,342	528,7	531,0	106,19	108,65	0,183	0,182	27	0,2574073
17,649	528,8	531,2	102,82	104,94	0,183	0,182	28	0,2639866
17,502	528,9	531,3	103,43	105,56	0,183	0,181	29	0,2621745
17,283	529,1	531,6	104,77	107,07	0,183	0,182	30	0,2588276
17,444	529,2	531,7	103,95	106,29	0,183	0,182	31	0,2608012
17,458	529,3	531,9	104,17	106,50	0,183	0,181	32	0,2607722
17,484	529,4	532,1	104,22	106,35	0,183	0,181	33	0,2609051
17,680	529,5	532,1	102,86	105,02	0,183	0,181	34	0,2639337
17,576	529,6	532,2	103,45	105,84	0,183	0,181	35	0,2625673
17,599	529,8	532,4	103,09	105,17	0,183	0,181	36	0,2631544
17,378	529,8	532,5	104,35	106,75	0,183	0,181	37	0,2598167
17,620	529,9	532,6	102,75	104,84	0,182	0,181	38	0,2635752
17,679	529,9	532,6	102,24	104,59	0,182	0,181	39	0,2645168
17,786	529,9	532,7	101,54	103,72	0,182	0,181	40	0,2662558
17,675	530,0	532,8	102,42	104,59	0,182	0,181	41	0,2645178
17,648	530,1	532,9	102,65	104,63	0,182	0,181	42	0,263935
17,607	530,1	532,9	102,73	105,21	0,182	0,181	43	0,2631583
17,884	530,2	533,0	101,26	103,53	0,182	0,181	44	0,2672209
17,666	530,2	533,1	102,79	105,17	0,182	0,181	45	0,2636517
17,704	530,3	533,2	102,92	105,23	0,182	0,181	46	0,2639366
17,479	530,4	533,4	104,55	106,42	0,182	0,181	47	0,2602186
17,746	530,5	533,5	102,55	104,62	0,182	0,181	48	0,2645215
17,610	530,6	533,6	103,67	105,74	0,182	0,181	49	0,2625784
17,705	530,7	533,8	103,00	105,05	0,183	0,181	50	0,2639397
17,772	530,7	533,8	102,40	104,33	0,183	0,181	51	0,2652972
17,619	530,7	533,9	102,93	105,38	0,182	0,181	52	0,2631603
17,524	530,7	534,0	103,77	106,03	0,182	0,181	53	0,2616851

17,870	530,8	534,1	101,68	103,62	0,182	0,181	54	0,2668411
17,678	530,8	534,2	102,78	104,84	0,182	0,181	55	0,2639413
17,623	530,8	534,2	103,15	105,06	0,183	0,181	56	0,2633236
17,948	530,9	534,3	101,17	103,16	0,183	0,181	57	0,2681613
17,839	530,9	534,4	101,55	103,71	0,182	0,181	58	0,2668438
17,666	531,0	534,5	102,34	104,32	0,183	0,181	59	0,2645272
17,439	531,0	534,5	103,40	105,72	0,182	0,181	60	0,2612069
17,839	531,0	534,6	100,89	102,87	0,182	0,181	61	0,2676126
17,816	531,0	534,7	100,74	102,71	0,182	0,181	62	0,2676125
17,735	531,1	534,8	101,41	103,35	0,182	0,181	63	0,2662664
17,935	531,1	534,8	100,06	101,87	0,182	0,181	64	0,2695103
17,785	531,2	534,9	100,53	102,57	0,182	0,181	65	0,2676132
17,633	531,3	535,0	101,52	103,54	0,182	0,181	66	0,2652835
17,627	531,3	535,0	101,44	103,47	0,182	0,181	67	0,2653089
17,765	531,4	535,1	100,67	102,69	0,182	0,181	68	0,2672205
17,413	531,4	535,1	103,08	104,95	0,182	0,181	69	0,2616028
17,816	531,5	535,2	100,69	102,48	0,182	0,181	70	0,2677717
17,702	531,5	535,3	101,05	102,88	0,182	0,180	71	0,2662685
17,562	531,6	535,4	102,00	103,93	0,182	0,180	72	0,263947
17,846	531,7	535,5	100,46	102,42	0,182	0,181	73	0,2681901
18,016	531,7	535,5	99,51	101,29	0,182	0,181	74	0,2708613
17,945	531,8	535,6	99,71	101,65	0,182	0,181	75	0,2699073
17,775	531,9	535,7	100,37	102,40	0,182	0,181	76	0,2676161
17,521	532,0	535,7	101,88	103,85	0,182	0,181	77	0,2639482
17,635	532,0	535,7	100,77	102,78	0,182	0,181	78	0,2661184
17,457	531,9	535,8	101,92	103,90	0,182	0,181	79	0,2631699
17,848	532,1	535,9	99,46	101,38	0,182	0,181	80	0,2695256
17,946	532,1	535,9	98,57	100,56	0,182	0,181	81	0,2712358
17,845	532,2	536,0	99,35	101,34	0,182	0,181	82	0,2696546
17,441	532,2	536,0	101,24	103,22	0,182	0,181	83	0,263948
17,708	532,2	536,0	99,65	101,43	0,182	0,180	84	0,2681915
17,837	532,2	536,0	98,80	100,83	0,182	0,181	85	0,2703589
17,787	532,2	536,1	98,77	100,84	0,182	0,181	86	0,2698986
17,764	532,1	536,0	98,92	100,80	0,182	0,181	87	0,2695278
17,337	532,1	536,1	101,28	103,41	0,182	0,181	88	0,2631704
17,885	532,1	536,1	98,32	100,09	0,182	0,181	89	0,2715195
17,868	532,1	536,1	98,31	100,31	0,182	0,181	90	0,2712373
17,416	532,1	536,2	100,76	102,56	0,182	0,181	91	0,2645332
17,932	532,1	536,2	97,53	99,32	0,182	0,180	92	0,2727459
17,586	532,1	536,3	99,36	101,12	0,182	0,180	93	0,2676928
17,681	532,2	536,3	98,45	100,40	0,182	0,180	94	0,2695272
17,745	532,3	536,3	98,09	100,08	0,182	0,181	95	0,2704785
17,705	532,2	536,2	98,21	100,25	0,182	0,181	96	0,2698973

Average	Average	Average	Proportional Rates Medium/low fire					Average
17,58	Inlet +	Inlet +						0,274
	Outlet	Outlet	Average	Average	#1	#2		
Tunnel	Temp.	Temp.	99,87	101,42	System 1	System 2		SQRT
Velocity	Meter 1	Meter 2	**Proportional Rates**		Vol.Std.	Vol.Std.		Delta-P
			PR1	**PR2**			Time	
Ft/Sec	Deg. R	Deg. R	**%**	**%**	(ft3)	(ft3)	min	(in H2O)2
17,336	532,2	534,8			0,182	0,175	0	0,2550516
17,071	532,3	534,9	107,93	109,95	0,182	0,175	1	0,2592405
17,710	532,3	535,0	104,11	105,79	0,182	0,175	2	0,2689216
17,738	532,4	535,2	104,34	106,28	0,182	0,175	3	0,2685726
17,801	532,4	535,3	104,51	106,32	0,182	0,175	4	0,2689549
17,909	532,5	535,5	104,70	106,19	0,182	0,175	5	0,2698576
17,663	532,5	535,6	104,74	106,58	0,182	0,175	6	0,2676163
17,687	532,4	535,7	104,58	106,16	0,182	0,175	7	0,2681901
17,494	532,5	535,8	105,61	107,20	0,182	0,175	8	0,2653057
17,650	532,5	535,9	104,48	106,23	0,182	0,175	9	0,2677957
17,862	532,5	535,9	103,54	105,18	0,182	0,175	10	0,2708557
17,932	532,5	535,9	101,55	103,14	0,182	0,175	11	0,2740577
17,138	532,5	536,0	105,83	107,46	0,182	0,175	12	0,2625827
17,746	532,5	535,9	101,92	103,37	0,182	0,175	13	0,2721797
17,967	532,5	535,9	100,53	102,30	0,182	0,175	14	0,2757364
17,564	532,5	536,0	102,74	104,48	0,182	0,175	15	0,2695305
17,937	532,5	536,0	100,26	101,99	0,182	0,175	16	0,2757376
17,735	532,5	536,0	101,37	103,13	0,182	0,175	17	0,272747
17,493	532,5	536,0	102,88	104,47	0,182	0,175	18	0,2689556
17,810	532,5	535,9	100,86	102,65	0,182	0,175	19	0,2741386
17,930	532,4	535,9	99,98	101,86	0,182	0,175	20	0,2759915
17,688	532,4	535,9	101,64	103,32	0,182	0,175	21	0,2721788
17,565	532,4	535,9	102,15	103,56	0,182	0,175	22	0,2704311
17,552	532,5	535,9	102,12	103,72	0,182	0,175	23	0,2704777
17,734	532,6	536,0	100,73	102,69	0,182	0,175	24	0,2734966
17,738	532,6	535,9	100,81	102,69	0,182	0,175	25	0,2735506
17,802	532,5	535,9	100,37	101,90	0,182	0,175	26	0,2746356
17,818	532,5	536,0	100,36	101,89	0,182	0,175	27	0,274797
17,871	532,4	536,1	99,91	101,61	0,182	0,175	28	0,2757395
17,689	532,4	536,1	101,13	102,90	0,182	0,175	29	0,2727453
17,316	532,4	536,1	103,08	104,65	0,182	0,175	30	0,2672208
17,369	532,3	536,1	102,92	104,52	0,182	0,175	31	0,2679819
17,260	532,3	536,1	103,41	105,34	0,182	0,175	32	0,2662723
17,757	532,2	536,1	100,49	102,06	0,182	0,175	33	0,2740592
17,899	532,2	536,2	99,85	101,24	0,182	0,175	34	0,2762967
17,981	532,2	536,2	99,35	100,89	0,182	0,175	35	0,2775829
17,332	532,2	536,2	103,06	104,41	0,182	0,175	36	0,267615
17,777	532,2	536,2	100,25	101,85	0,182	0,175	37	0,2744331
17,824	532,2	536,2	99,99	101,59	0,182	0,175	38	0,2753659
17,462	532,2	536,2	101,90	103,55	0,182	0,175	39	0,2699101
17,273	532,2	536,2	103,11	104,77	0,182	0,175	40	0,2668507
17,916	532,1	536,2	99,56	101,09	0,182	0,175	41	0,2766678
17,793	532,1	536,3	100,22	101,83	0,182	0,175	42	0,2748289
17,718	532,1	536,3	100,64	102,02	0,182	0,175	43	0,2737701
17,714	532,1	536,3	100,71	102,36	0,182	0,175	44	0,2734977
17,385	532,1	536,3	102,45	104,07	0,182	0,175	45	0,2685723
17,504	532,2	536,3	101,91	103,57	0,182	0,175	46	0,2704723
17,756	532,3	536,3	100,35	101,68	0,182	0,175	47	0,2744327
17,734	532,4	536,4	100,51	102,04	0,182	0,175	48	0,2740546
17,099	532,3	536,4	104,47	105,92	0,182	0,175	49	0,2639498
17,899	532,4	536,4	99,67	101,42	0,182	0,175	50	0,2762849
18,011	532,4	536,4	98,94	100,68	0,182	0,175	51	0,2780162
17,554	532,4	536,3	101,88	103,35	0,182	0,175	52	0,2708556
17,767	532,3	536,3	100,67	101,87	0,182	0,175	53	0,2740589
17,891	532,3	536,3	100,14	101,49	0,182	0,175	54	0,2757381
17,903	532,3	536,3	100,23	101,37	0,182	0,175	55	0,2757383
17,814	532,3	536,3	100,73	102,13	0,182	0,175	56	0,2744322
17,474	532,3	536,4	102,80	103,88	0,182	0,175	57	0,2689926
17,889	532,3	536,4	100,30	101,97	0,182	0,175	58	0,2753657
17,911	532,3	536,4	100,16	101,48	0,182	0,175	59	0,2757721
17,767	532,3	536,4	101,10	102,58	0,182	0,175	60	0,2734958
17,913	532,3	536,4	100,25	101,73	0,182	0,175	61	0,2757386

17,337	532,3	536,4	103,74	105,22	0,182	0,175	62	0,2668475
17,770	532,3	536,5	100,69	102,40	0,182	0,175	63	0,2740577
17,806	532,4	536,5	100,68	102,16	0,182	0,175	64	0,2744236
17,801	532,3	536,5	100,52	102,11	0,182	0,175	65	0,2744309
17,316	532,3	536,5	103,43	105,07	0,182	0,175	66	0,2668482
17,836	532,3	536,5	100,54	102,11	0,182	0,175	67	0,2748068
17,793	532,3	536,5	100,86	102,30	0,182	0,175	68	0,2740581
18,018	532,3	536,5	99,63	101,05	0,182	0,175	69	0,2775891
17,890	532,3	536,5	100,33	101,65	0,182	0,175	70	0,275739
17,740	532,3	536,5	100,81	102,41	0,182	0,175	71	0,2735151
17,883	532,3	536,5	99,98	101,37	0,182	0,175	72	0,2757202
17,821	532,3	536,5	100,37	101,84	0,182	0,175	73	0,2747873
17,565	532,3	536,6	102,03	103,39	0,182	0,175	74	0,2708569
17,923	532,3	536,6	99,87	101,65	0,182	0,175	75	0,2762968
18,045	532,4	536,6	99,24	100,37	0,182	0,175	76	0,2783325
17,439	532,4	536,6	102,62	103,96	0,182	0,175	77	0,2689542
17,505	532,4	536,6	102,18	103,86	0,182	0,175	78	0,2699072
17,359	532,4	536,6	103,11	104,85	0,182	0,175	79	0,2676165
17,780	532,4	536,6	100,42	101,91	0,182	0,175	80	0,2744516
17,564	532,4	536,6	101,66	103,17	0,182	0,175	81	0,2709214
17,758	532,4	536,6	100,69	102,08	0,182	0,175	82	0,2740599
17,719	532,4	536,6	100,69	102,44	0,182	0,175	83	0,2734966
17,236	532,4	536,6	103,58	105,17	0,182	0,175	84	0,2658639
17,923	532,4	536,6	99,51	101,09	0,182	0,175	85	0,276666
17,930	532,5	536,6	99,73	101,24	0,182	0,175	86	0,2766677
17,769	532,5	536,6	100,21	101,65	0,182	0,175	87	0,274434
17,493	532,4	536,6	102,04	103,53	0,182	0,175	88	0,2702533
17,690	532,4	536,6	100,71	102,09	0,182	0,175	89	0,2733268
17,745	532,5	536,7	100,56	102,07	0,182	0,175	90	0,2740582
17,086	532,5	536,7	104,37	105,85	0,182	0,175	91	0,2639503
17,763	532,5	536,7	100,29	101,90	0,182	0,175	92	0,274434
17,711	532,5	536,7	100,63	102,13	0,182	0,175	93	0,2737089
17,811	532,5	536,7	99,85	101,44	0,182	0,175	94	0,2753671
17,652	532,5	536,7	100,87	102,39	0,182	0,175	95	0,2727502
17,711	532,5	536,7	100,52	102,33	0,182	0,175	96	0,2735971
17,881	532,5	536,7	99,64	101,04	0,182	0,175	97	0,2762972
17,303	532,6	536,7	102,81	104,30	0,182	0,175	98	0,2676173
17,402	532,7	536,8	102,26	103,81	0,182	0,175	99	0,2689553
17,830	532,8	536,8	99,81	101,12	0,182	0,175	100	0,27574
17,443	532,8	536,7	101,69	103,42	0,182	0,175	101	0,2699095
17,949	532,7	536,7	98,90	100,30	0,182	0,175	102	0,2775937
17,951	532,7	536,7	99,09	100,48	0,182	0,175	103	0,2775943
17,252	532,6	536,7	102,97	104,63	0,182	0,175	104	0,266849
17,997	532,6	536,7	98,97	100,58	0,182	0,175	105	0,2783145
17,645	532,6	536,7	100,54	102,19	0,182	0,175	106	0,2730074
17,428	532,6	536,7	102,05	103,49	0,182	0,175	107	0,2695269
17,741	532,6	536,7	100,27	101,72	0,182	0,175	108	0,2744336
17,302	532,6	536,8	102,68	104,38	0,182	0,175	109	0,2676115
17,803	532,6	536,8	99,83	101,42	0,182	0,175	110	0,2754116
17,175	532,6	536,8	103,03	104,66	0,182	0,175	111	0,2662711
17,770	532,6	536,8	99,89	100,98	0,182	0,175	112	0,2753671
17,996	532,6	536,8	98,50	99,92	0,182	0,175	113	0,2790004
17,632	532,5	536,8	100,21	101,61	0,182	0,175	114	0,2734972
17,854	532,6	536,8	99,13	100,61	0,182	0,175	115	0,2765893
17,484	532,6	536,8	101,34	102,95	0,182	0,175	116	0,2708569
17,503	532,6	536,7	101,07	102,43	0,182	0,175	117	0,2712358
17,411	532,6	536,7	101,72	103,15	0,182	0,175	118	0,2699072
17,783	532,6	536,7	99,48	100,89	0,182	0,175	119	0,2756017
17,800	532,6	536,6	99,52	101,04	0,182	0,175	120	0,2757393
17,341	532,6	536,6	102,26	103,63	0,182	0,175	121	0,2685726
17,482	532,6	536,6	101,29	102,85	0,182	0,175	122	0,270857
17,458	532,5	536,6	101,24	102,87	0,182	0,175	123	0,2704733
17,183	532,5	536,5	102,99	104,48	0,182	0,175	124	0,2662695
17,767	532,5	536,5	99,70	101,01	0,182	0,175	125	0,2753661
17,650	532,5	536,5	100,30	101,92	0,182	0,175	126	0,2734963
17,830	532,5	536,5	99,35	100,90	0,182	0,175	127	0,2762964
17,640	532,6	536,6	100,16	101,71	0,182	0,175	128	0,2734964
17,869	532,6	536,6	99,17	100,52	0,182	0,175	129	0,2770379
17,658	532,6	536,6	99,99	101,42	0,182	0,175	130	0,2740577

17,654	532,6	536,6	99,89	101,53	0,182	0,175	131	0,2740583
17,873	532,5	536,6	98,80	100,27	0,182	0,175	132	0,2775736
17,290	532,6	536,6	102,05	103,49	0,182	0,175	133	0,2685723
17,269	532,6	536,7	102,07	103,70	0,182	0,175	134	0,2681902
17,421	532,7	536,7	100,96	102,52	0,182	0,175	135	0,270736
17,667	532,7	536,7	99,67	101,06	0,182	0,175	136	0,2744369
17,376	532,8	536,7	101,42	102,79	0,182	0,175	137	0,2699082
17,952	532,9	536,8	98,01	99,86	0,182	0,175	138	0,2788851
17,760	532,8	536,7	99,31	100,78	0,182	0,175	139	0,2757387
17,516	532,8	536,7	100,55	102,10	0,182	0,175	140	0,272138
17,802	532,7	536,7	98,91	100,27	0,182	0,175	141	0,2766672
17,777	532,6	536,6	98,99	100,43	0,182	0,175	142	0,2762955
17,965	532,6	536,6	97,84	99,48	0,182	0,175	143	0,2792519
17,854	532,5	536,5	98,37	100,01	0,182	0,175	144	0,2775878
17,727	532,6	536,6	99,06	100,41	0,182	0,175	145	0,2757217
17,268	532,7	536,6	101,59	102,81	0,182	0,174	146	0,2685721
17,800	532,7	536,6	98,55	100,38	0,182	0,175	147	0,2770091
17,582	532,7	536,6	99,76	101,22	0,182	0,175	148	0,2734948
17,202	532,7	536,6	102,08	103,63	0,182	0,175	149	0,2676151
17,294	532,7	536,6	101,55	103,25	0,182	0,175	150	0,2689535
17,730	532,7	536,5	98,94	100,01	0,182	0,174	151	0,2757375
17,766	532,6	536,5	98,90	100,51	0,182	0,174	152	0,2762939
17,691	532,6	536,5	99,10	100,69	0,182	0,175	153	0,2753655
17,624	532,6	536,5	99,54	101,15	0,182	0,175	154	0,2744315
17,188	532,6	536,5	102,19	103,72	0,182	0,175	155	0,2676144
17,229	532,5	536,5	101,72	103,58	0,182	0,175	156	0,26844
17,215	532,5	536,4	101,86	103,48	0,182	0,175	157	0,2681891
17,588	532,5	536,3	99,82	100,99	0,182	0,175	158	0,2740566
17,591	532,4	536,3	99,66	101,27	0,182	0,175	159	0,2740568
17,548	532,4	536,3	99,86	101,61	0,182	0,175	160	0,2735075
17,537	532,4	536,3	99,93	101,13	0,182	0,175	161	0,2734946
17,577	532,3	536,3	99,73	101,03	0,182	0,175	162	0,2740562
17,727	532,3	536,3	98,91	100,10	0,182	0,175	163	0,2762933
17,804	532,3	536,3	98,42	99,77	0,182	0,175	164	0,2775733
17,659	532,3	536,3	99,05	100,68	0,182	0,175	165	0,2753576
17,057	532,4	536,4	102,85	104,11	0,182	0,175	166	0,2658831
17,705	532,4	536,3	98,83	100,15	0,182	0,175	167	0,276294
17,709	532,4	536,4	98,74	100,14	0,182	0,175	168	0,2762941
17,558	532,4	536,3	99,55	100,94	0,182	0,175	169	0,2740808
17,869	532,4	536,3	97,72	99,28	0,182	0,175	170	0,2788812
17,484	532,3	536,3	100,08	101,55	0,182	0,175	171	0,2727432
17,529	532,3	536,2	99,64	101,06	0,182	0,175	172	0,2734935
17,912	532,3	536,2	97,63	99,17	0,182	0,175	173	0,2794708
17,745	532,3	536,3	98,47	99,86	0,182	0,175	174	0,2770345
17,599	532,3	536,2	99,19	100,66	0,182	0,175	175	0,2748045
17,715	532,4	536,2	98,32	100,03	0,182	0,175	176	0,2766646
17,761	532,3	536,4	98,14	99,44	0,182	0,175	177	0,2775897
17,700	532,3	536,4	98,53	99,94	0,182	0,175	178	0,2766663
17,274	532,3	536,3	101,00	102,43	0,182	0,175	179	0,2699041
17,582	532,3	536,4	99,02	100,39	0,182	0,175	180	0,2748026
17,252	532,4	536,4	101,11	102,63	0,182	0,175	181	0,2695224
17,484	532,5	536,4	99,51	101,01	0,182	0,175	182	0,2733235
17,704	532,5	536,3	98,29	100,00	0,182	0,175	183	0,2766658
17,621	532,4	536,3	98,82	100,47	0,182	0,175	184	0,2753635
17,705	532,4	536,3	98,41	100,25	0,182	0,175	185	0,2766637
17,677	532,4	536,3	98,49	100,14	0,182	0,175	186	0,2763001
17,711	532,3	536,2	98,46	99,80	0,182	0,175	187	0,2766536
17,867	532,2	536,2	97,58	99,09	0,182	0,175	188	0,2792485
17,574	532,2	536,2	98,97	100,82	0,182	0,175	189	0,2748022
17,579	532,2	536,2	99,01	100,41	0,182	0,175	190	0,2748244
17,614	532,3	536,2	98,79	100,32	0,182	0,175	191	0,2753483
17,495	532,3	536,2	99,54	100,84	0,182	0,175	192	0,2734921
17,615	532,3	536,2	98,74	100,31	0,182	0,175	193	0,2753614
17,676	532,3	536,1	98,52	100,12	0,182	0,175	194	0,2762912
17,583	532,2	536,1	99,10	100,51	0,182	0,175	195	0,2748023
17,755	532,2	536,2	97,99	99,53	0,182	0,175	196	0,2775884
17,533	532,2	536,1	99,24	100,81	0,182	0,175	197	0,2740599
17,297	532,2	536,1	100,51	102,17	0,182	0,175	198	0,270473
17,545	532,2	536,1	99,15	100,89	0,182	0,175	199	0,2741889

17,618	532,1	536,0	98,66	100,40	0,182	0,175	200	0,275409
17,346	532,1	536,0	100,31	101,74	0,182	0,175	201	0,2712194
17,575	532,0	536,0	99,02	100,69	0,182	0,175	202	0,2748017
17,445	532,0	536,0	99,73	101,35	0,182	0,175	203	0,27274
17,876	532,1	536,0	97,36	98,84	0,182	0,175	204	0,2795466
17,664	532,2	536,0	98,39	100,06	0,182	0,175	205	0,2762873
17,595	532,2	536,0	98,77	100,19	0,182	0,175	206	0,2753591
17,822	532,3	536,0	97,47	99,11	0,182	0,175	207	0,2788797
17,685	532,3	536,0	98,32	99,88	0,182	0,175	208	0,2766629
17,004	532,3	535,9	102,21	103,71	0,182	0,175	209	0,2660077
17,486	532,3	535,9	99,40	101,12	0,182	0,175	210	0,2734888
17,561	532,3	535,9	98,91	100,46	0,182	0,175	211	0,2748005
17,468	532,3	536,0	99,43	100,77	0,182	0,175	212	0,2734905
17,788	532,3	536,0	97,63	99,07	0,182	0,175	213	0,2783264
17,303	532,3	536,0	100,23	102,00	0,182	0,175	214	0,2707908
17,622	532,3	536,0	98,65	100,18	0,182	0,175	215	0,2757325
17,662	532,3	536,0	98,37	99,87	0,182	0,175	216	0,2762894
17,482	532,2	535,9	99,40	100,89	0,182	0,175	217	0,2734908
17,625	532,2	536,0	98,62	100,30	0,182	0,175	218	0,2756817
17,537	532,3	536,0	99,01	100,35	0,182	0,175	219	0,2744274
17,079	532,3	536,0	101,72	103,25	0,182	0,175	220	0,267225
17,474	532,4	535,9	99,39	100,79	0,182	0,175	221	0,2734896
17,097	532,4	535,9	101,56	103,02	0,182	0,175	222	0,2676099
17,612	532,4	536,0	98,59	100,00	0,182	0,175	223	0,2757323
17,781	532,4	535,9	97,55	99,14	0,182	0,175	224	0,2783265
17,161	532,4	535,9	101,17	102,75	0,182	0,175	225	0,2685665
17,782	532,4	535,9	97,55	99,03	0,182	0,175	226	0,2783252
17,231	532,4	535,9	100,47	102,07	0,182	0,175	227	0,2697682
17,650	532,4	535,9	98,24	99,64	0,182	0,175	228	0,2762899
17,538	532,5	535,9	99,16	100,59	0,182	0,175	229	0,2744266
17,535	532,5	536,0	99,05	100,73	0,182	0,175	230	0,2744266
17,578	532,5	535,9	98,82	100,39	0,182	0,175	231	0,2751055
17,312	532,5	535,9	100,25	101,87	0,182	0,175	232	0,2710519
17,615	532,4	535,9	98,48	99,98	0,182	0,175	233	0,2757302
17,731	532,3	535,9	97,77	99,47	0,182	0,175	234	0,2776103
17,690	532,3	535,8	98,08	99,73	0,182	0,175	235	0,2770315
17,647	532,3	535,8	98,37	99,97	0,182	0,175	236	0,2762915
17,670	532,2	535,7	98,40	99,74	0,182	0,175	237	0,2766591
17,692	532,2	535,8	98,24	99,55	0,182	0,175	238	0,2770318
17,644	532,3	535,8	98,33	99,83	0,182	0,175	239	0,2762896
17,382	532,3	535,8	99,78	101,42	0,182	0,175	240	0,272172
17,605	532,3	535,8	98,64	100,31	0,182	0,175	241	0,2757319
17,665	532,3	535,8	98,21	99,94	0,182	0,175	242	0,2766634
16,848	532,3	535,7	102,88	104,61	0,182	0,175	243	0,2639436
17,539	532,2	535,7	98,83	100,71	0,182	0,175	244	0,2748003
17,585	532,2	535,6	98,58	100,21	0,182	0,175	245	0,2754493
17,268	532,2	535,6	100,25	102,22	0,182	0,175	246	0,2704692
17,577	532,2	535,6	98,52	100,32	0,182	0,175	247	0,2753599
17,595	532,1	535,5	98,49	100,11	0,182	0,175	248	0,2757325
17,812	532,2	535,6	97,23	98,74	0,182	0,175	249	0,279246
17,096	532,2	535,6	101,22	102,97	0,182	0,175	250	0,2679286
16,971	532,3	535,6	102,00	103,90	0,182	0,175	251	0,265891
17,708	532,3	535,6	97,77	99,31	0,182	0,175	252	0,2775842
17,505	532,3	535,6	98,95	100,55	0,182	0,175	253	0,2743605
17,646	532,3	535,6	98,14	99,90	0,182	0,175	254	0,2765834
17,451	532,2	535,6	99,21	101,01	0,182	0,175	255	0,2734895
17,366	532,3	535,7	99,79	101,49	0,182	0,175	256	0,2721735
17,047	532,3	535,7	101,55	103,37	0,182	0,175	257	0,2672123
17,130	532,3	535,7	100,89	102,69	0,182	0,175	258	0,2685894
17,364	532,2	535,6	99,67	101,26	0,182	0,175	259	0,2721774
17,528	532,1	535,6	98,76	100,40	0,182	0,175	260	0,2747983
17,407	532,1	535,6	99,60	101,30	0,182	0,175	261	0,2727315
17,308	532,1	535,6	100,31	101,80	0,182	0,175	262	0,2712273
17,608	532,1	535,6	98,47	100,11	0,182	0,175	263	0,2759465
17,133	532,1	535,7	101,12	102,81	0,182	0,175	264	0,2685583
17,563	532,0	535,6	98,70	100,21	0,182	0,175	265	0,2753585
17,628	532,0	535,6	98,38	99,77	0,182	0,175	266	0,2762883
17,074	532,0	535,6	101,54	103,01	0,182	0,175	267	0,2676531
17,580	532,0	535,7	98,46	99,79	0,182	0,175	268	0,27574

17,448	531,9	535,7	99,31	100,81	0,182	0,175	269	0,2734878
17,587	531,9	535,6	98,56	100,10	0,182	0,175	270	0,2757318
17,129	531,9	535,7	101,13	102,61	0,182	0,175	271	0,2685911
17,396	531,8	535,6	99,62	101,08	0,182	0,175	272	0,2727368
17,559	531,8	535,6	98,66	100,20	0,182	0,175	273	0,2753583
17,621	531,8	535,6	98,42	99,73	0,182	0,175	274	0,2762894
17,212	531,8	535,6	100,67	102,05	0,182	0,175	275	0,2699009
16,955	531,8	535,5	102,16	103,62	0,182	0,175	276	0,2658774
17,541	531,8	535,5	98,70	100,35	0,182	0,175	277	0,2750063
17,559	531,8	535,6	98,58	100,20	0,182	0,175	278	0,2753387
17,043	531,8	535,6	101,65	103,04	0,182	0,175	279	0,2672246
17,440	531,8	535,5	99,26	100,96	0,182	0,175	280	0,2734881
17,472	531,8	535,4	99,18	100,65	0,182	0,175	281	0,2739857
17,619	531,8	535,4	98,22	99,66	0,182	0,175	282	0,2762882
17,493	531,8	535,4	98,88	100,42	0,182	0,175	283	0,2744252
17,301	531,8	535,5	100,03	101,59	0,182	0,175	284	0,271328
17,629	531,8	535,5	98,16	99,56	0,182	0,175	285	0,276518
17,854	531,6	535,4	96,80	98,53	0,182	0,175	286	0,2801607
17,057	531,4	535,3	101,37	103,10	0,182	0,175	287	0,2676089
17,592	531,3	535,2	98,27	99,56	0,182	0,175	288	0,2762869
17,493	531,1	535,2	99,04	100,51	0,182	0,175	289	0,274425
17,235	531,2	535,2	100,82	102,32	0,182	0,175	290	0,2699019
17,415	531,4	535,3	100,14	101,89	0,182	0,175	291	0,2721813
17,695	531,6	535,4	98,77	100,19	0,182	0,175	292	0,276287
17,289	531,7	535,5	101,22	103,00	0,182	0,175	293	0,2695037
17,349	531,8	535,5	101,09	102,69	0,182	0,175	294	0,2702589
17,572	531,8	535,5	99,99	101,52	0,182	0,175	295	0,2734875
17,359	531,8	535,4	101,45	103,03	0,182	0,175	296	0,2698999
17,645	531,8	535,4	99,90	101,51	0,182	0,175	297	0,2740496
17,547	531,9	535,5	100,37	102,11	0,182	0,175	298	0,2728848
17,678	532,0	535,6	99,20	100,90	0,182	0,175	299	0,2753568
17,573	532,0	535,6	99,60	101,29	0,182	0,175	300	0,2740535
17,703	532,1	535,6	98,79	100,32	0,182	0,175	301	0,2762881
17,468	532,2	535,7	100,04	101,45	0,182	0,175	302	0,2727359
17,628	532,2	535,7	98,98	100,51	0,182	0,175	303	0,2753572
17,587	532,2	535,7	99,07	100,64	0,182	0,175	304	0,2748334
17,696	532,2	535,7	98,36	100,03	0,182	0,175	305	0,2766567
17,667	532,2	535,7	98,34	99,99	0,182	0,175	306	0,2762884
17,485	532,1	535,7	99,38	101,22	0,182	0,175	307	0,2734886
17,259	532,1	535,8	100,66	102,50	0,182	0,175	308	0,2699439
17,476	532,1	535,8	99,30	101,12	0,182	0,175	309	0,2734813
17,704	532,1	535,8	98,08	99,74	0,182	0,175	310	0,277031
17,559	532,1	535,8	98,96	100,47	0,182	0,175	311	0,2748
17,739	532,1	535,8	97,92	99,64	0,182	0,175	312	0,2775865
17,700	532,2	535,8	98,11	99,48	0,182	0,175	313	0,2770302
17,734	532,2	535,9	97,74	99,30	0,182	0,175	314	0,2775954
17,507	532,2	535,9	99,02	100,73	0,182	0,175	315	0,2740514
17,327	532,3	535,9	100,10	101,60	0,182	0,175	316	0,2712288
17,744	532,2	535,9	97,83	99,22	0,182	0,175	317	0,2778225
17,488	532,2	535,9	99,00	100,80	0,182	0,175	318	0,2738222
17,771	532,3	535,9	97,57	99,18	0,182	0,175	319	0,2782621
17,602	532,2	535,9	98,40	100,08	0,182	0,175	320	0,2757327
17,461	532,2	535,9	99,50	100,92	0,182	0,175	321	0,273489
17,643	532,1	535,9	98,37	99,81	0,182	0,175	322	0,2762894
17,418	532,1	535,9	99,61	101,24	0,182	0,175	323	0,2727734
17,665	532,1	536,0	98,09	99,77	0,182	0,175	324	0,2766597
17,209	532,2	536,0	100,78	102,43	0,182	0,175	325	0,2695205
17,585	532,3	536,0	98,89	100,25	0,182	0,175	326	0,275359
17,802	532,3	536,0	97,56	98,91	0,182	0,175	327	0,2787783
17,609	532,2	535,9	98,69	100,17	0,182	0,175	328	0,2757314
17,465	532,2	535,9	99,32	100,93	0,182	0,175	329	0,2734893
17,722	532,3	535,9	97,89	99,42	0,182	0,175	330	0,2775863
17,454	532,4	536,0	99,24	100,72	0,182	0,175	331	0,2734891
17,642	532,4	536,0	98,33	99,90	0,182	0,175	332	0,2763866
17,600	532,4	536,0	98,59	100,20	0,182	0,175	333	0,2757326
17,580	532,5	536,1	98,66	100,16	0,182	0,175	334	0,2753591
17,546	532,5	536,1	98,84	100,54	0,182	0,175	335	0,274799
17,139	532,4	536,1	101,21	102,75	0,182	0,175	336	0,2683881
17,463	532,5	536,3	99,45	100,94	0,182	0,175	337	0,2734954

17,451	532,6	536,4	99,28	100,63	0,182	0,175	338	0,27349
17,718	532,6	536,3	97,71	99,16	0,182	0,175	339	0,2775869
17,661	532,6	536,3	98,09	99,72	0,182	0,175	340	0,2766613
17,492	532,6	536,4	98,92	100,59	0,182	0,175	341	0,2740536
17,819	532,7	536,4	97,22	98,59	0,182	0,175	342	0,2792465
17,571	532,6	536,4	98,67	100,24	0,182	0,175	343	0,2753586
17,595	532,5	536,3	98,44	100,01	0,182	0,175	344	0,2757316
17,639	532,5	536,3	98,34	99,60	0,182	0,175	345	0,2762898
17,643	532,5	536,2	98,27	99,83	0,182	0,175	346	0,2763203
17,168	532,5	536,2	101,04	102,56	0,182	0,175	347	0,2689479
17,055	532,5	536,1	101,55	103,13	0,182	0,175	348	0,2672258
17,456	532,5	536,2	99,25	100,75	0,182	0,175	349	0,2734896
17,694	532,5	536,3	97,92	99,31	0,182	0,175	350	0,2770312
17,728	532,6	536,3	98,18	99,43	0,182	0,174	351	0,2770708
17,475	532,7	536,4	99,85	101,35	0,182	0,175	352	0,2727376
17,589	532,8	536,5	99,59	101,11	0,182	0,175	353	0,2740517
17,865	532,7	536,4	97,93	99,54	0,182	0,175	354	0,278322
17,701	532,7	536,4	98,72	100,28	0,182	0,175	355	0,2760753
17,702	532,8	536,5	98,49	100,26	0,182	0,175	356	0,2762951
17,598	532,8	536,5	98,97	100,55	0,182	0,175	357	0,2747994
17,506	532,9	536,5	99,39	100,96	0,182	0,175	358	0,2734897
17,872	532,8	536,5	97,49	99,03	0,182	0,175	359	0,2792464
17,704	532,8	536,4	98,18	99,61	0,182	0,175	360	0,2766849
17,004	532,8	536,4	102,29	103,66	0,182	0,175	361	0,2658746
17,609	532,7	536,4	98,69	100,37	0,182	0,175	362	0,2753599
17,147	532,7	536,3	101,31	102,82	0,182	0,175	363	0,2681849
17,567	532,7	536,3	98,82	100,60	0,182	0,175	364	0,2747972
17,706	532,7	536,3	98,09	99,46	0,182	0,175	365	0,2770265
17,705	532,7	536,3	98,07	99,44	0,182	0,175	366	0,2770318
17,591	532,7	536,3	98,47	100,09	0,182	0,175	367	0,2753592
17,532	532,7	536,2	98,99	100,73	0,182	0,175	368	0,2744273
17,678	532,6	536,2	98,34	99,73	0,182	0,175	369	0,2766617
17,877	532,6	536,2	97,13	98,76	0,182	0,175	370	0,2797966
17,475	532,5	536,2	99,45	100,74	0,182	0,175	371	0,2734914
17,702	532,5	536,1	97,99	99,52	0,182	0,175	372	0,2770327
17,778	532,5	536,1	97,61	98,94	0,182	0,175	373	0,2783261
17,559	532,4	536,1	98,84	100,34	0,182	0,175	374	0,2748302
17,592	532,4	536,0	98,56	100,19	0,182	0,175	375	0,2753599
17,778	532,4	536,0	97,58	98,90	0,182	0,175	376	0,278326
17,553	532,4	536,0	98,96	100,27	0,182	0,175	377	0,2748011
17,529	532,3	536,0	98,97	100,64	0,182	0,175	378	0,2744571
17,662	532,3	535,9	98,07	99,77	0,182	0,175	379	0,2766616
17,602	532,2	535,9	98,46	99,83	0,182	0,175	380	0,2757295
17,809	532,2	536,0	97,30	98,99	0,182	0,175	381	0,2788784
17,809	532,2	536,0	97,40	99,03	0,182	0,175	382	0,2788802
17,774	532,2	536,0	97,62	99,13	0,182	0,175	383	0,2783261
17,272	532,3	536,0	100,54	102,07	0,182	0,175	384	0,2704894
17,916	532,3	536,0	96,79	98,58	0,182	0,175	385	0,2805317
17,585	532,3	536,0	98,73	100,14	0,182	0,175	386	0,2753604
17,177	532,3	536,0	101,02	102,88	0,182	0,175	387	0,2689498
17,665	532,3	536,0	98,08	99,66	0,182	0,175	388	0,2766622
17,769	532,3	536,0	97,61	99,07	0,182	0,175	389	0,2783266
17,821	532,3	535,9	97,20	98,54	0,182	0,175	390	0,2792473
17,230	532,2	535,9	100,66	102,29	0,182	0,175	391	0,2699026
17,469	532,2	535,9	99,26	100,65	0,182	0,175	392	0,2736467
17,805	532,2	535,9	97,40	99,03	0,182	0,175	393	0,2788856
17,688	532,2	535,9	98,00	99,57	0,182	0,175	394	0,2770327
17,147	532,2	535,9	101,10	102,83	0,182	0,175	395	0,2685664
17,283	532,2	535,9	100,41	101,90	0,182	0,175	396	0,2707134
17,237	532,2	536,0	100,64	102,23	0,182	0,175	397	0,2699304
17,319	532,2	535,9	100,08	101,83	0,182	0,175	398	0,2712276
17,722	532,2	535,9	97,82	99,44	0,182	0,175	399	0,277588
17,538	532,2	535,9	98,75	100,35	0,182	0,175	400	0,274801
17,471	532,2	535,9	99,22	100,85	0,182	0,175	401	0,273724
17,402	532,1	535,9	99,60	101,27	0,182	0,175	402	0,272739
17,281	532,1	535,8	100,35	101,99	0,182	0,175	403	0,2708538
17,651	532,1	535,8	98,06	99,65	0,182	0,175	404	0,2766623
17,621	532,1	535,8	98,40	99,90	0,182	0,175	405	0,2760949

Average	Average	Average	Proportional Rates Medium/low fire					Average
17,65	Inlet +	Inlet +						0,276
	Outlet	Outlet	Average	Average	#1	#2		
Tunnel	Temp.	Temp.	100,01	103,06	System 1	System 2		SQRT
Velocity	Meter 1	Meter 2	**Proportional Rates**		Vol.Std.	Vol.Std.		Delta-P
			PR1	**PR2**			Time	
Ft/Sec	Deg. R	Deg. R	**%**	**%**	(ft3)	(ft3)	min	(in H2O)2
18,265	532,6	533,0			0,182	0,182	0	0,2775997
17,897	532,7	533,2	101,49	104,95	0,183	0,182	1	0,2753729
17,869	532,8	533,4	102,02	105,78	0,183	0,182	2	0,2742764
17,701	532,8	533,5	103,59	107,32	0,182	0,182	3	0,2708626
17,715	532,8	533,6	103,98	107,65	0,182	0,182	4	0,2704946
17,861	532,7	533,7	102,33	105,86	0,183	0,182	5	0,2741189
17,955	532,7	533,8	101,66	105,21	0,183	0,182	6	0,2757459
17,403	532,7	533,9	104,68	108,47	0,183	0,182	7	0,2672383
17,531	532,8	534,0	104,45	107,91	0,183	0,182	8	0,2689605
17,889	532,8	534,2	102,25	105,78	0,183	0,182	9	0,2744386
17,556	532,8	534,3	104,36	108,02	0,183	0,182	10	0,2689348
18,239	532,8	534,4	100,57	104,05	0,183	0,182	11	0,2792587
18,003	532,8	534,6	102,16	105,61	0,183	0,182	12	0,2753721
17,647	532,8	534,6	104,23	108,19	0,183	0,182	13	0,2696794
17,909	532,8	534,7	102,96	106,50	0,183	0,182	14	0,2735713
17,981	532,9	534,8	102,87	106,16	0,183	0,182	15	0,2744418
17,652	532,9	534,9	104,70	108,24	0,183	0,182	16	0,2693503
18,099	532,9	535,0	101,88	105,36	0,183	0,182	17	0,2764494
18,067	533,0	535,1	102,41	105,95	0,183	0,182	18	0,2757442
17,956	533,1	535,2	102,99	106,10	0,183	0,182	19	0,2740652
17,869	533,2	535,3	103,28	106,99	0,183	0,182	20	0,2727529
17,917	533,3	535,5	103,07	106,41	0,183	0,182	21	0,2735038
18,106	533,4	535,8	101,87	105,12	0,183	0,182	22	0,2765123
18,007	533,5	535,9	102,52	105,90	0,183	0,182	23	0,2748139
17,699	533,7	536,0	104,59	107,90	0,183	0,182	24	0,2699157
18,007	533,8	536,2	102,51	106,12	0,183	0,182	25	0,274661
18,106	533,8	536,3	101,97	105,30	0,183	0,182	26	0,2763046
18,135	533,8	536,4	101,60	104,88	0,183	0,181	27	0,2770475
18,105	533,9	536,5	101,70	104,79	0,183	0,181	28	0,2766799
17,644	533,9	536,6	104,33	107,79	0,183	0,181	29	0,2695349
17,796	534,0	536,6	103,13	106,36	0,182	0,181	30	0,2721272
18,087	534,0	536,7	101,53	104,80	0,182	0,181	31	0,2766771
18,082	534,0	536,8	101,60	104,61	0,183	0,181	32	0,2766771
17,912	534,1	536,9	102,17	105,20	0,183	0,181	33	0,2744424
17,835	534,2	537,0	102,85	106,29	0,183	0,181	34	0,2730691
18,166	534,2	537,1	100,80	103,92	0,183	0,181	35	0,2783338
18,023	534,1	537,1	101,55	104,60	0,183	0,181	36	0,2763059
17,571	534,1	537,1	103,87	107,28	0,183	0,181	37	0,2695359
18,164	534,1	537,2	100,24	103,50	0,182	0,181	38	0,2788957
18,145	534,1	537,3	100,43	103,78	0,182	0,181	39	0,2783399
17,685	534,1	537,3	103,32	106,44	0,182	0,181	40	0,2712454
17,382	534,2	537,4	104,80	108,02	0,183	0,181	41	0,2668744
17,619	534,3	537,5	103,66	106,97	0,182	0,181	42	0,270241
17,604	534,2	537,5	103,88	107,10	0,183	0,181	43	0,2699381
17,593	534,2	537,5	103,83	106,85	0,183	0,181	44	0,2699177
18,005	534,1	537,5	101,28	104,48	0,183	0,181	45	0,2763065
17,927	534,1	537,5	101,65	104,79	0,183	0,181	46	0,2753784
17,657	534,1	537,5	103,30	106,08	0,183	0,181	47	0,2712418
17,987	534,1	537,5	101,35	104,58	0,183	0,181	48	0,2763076
18,149	534,0	537,5	100,15	103,29	0,183	0,181	49	0,2788954
18,164	534,1	537,5	100,13	102,92	0,182	0,181	50	0,2792631
17,936	534,1	537,6	101,23	104,42	0,183	0,181	51	0,2759477
18,076	534,1	537,6	100,19	103,48	0,183	0,181	52	0,2783435
17,953	534,1	537,6	101,09	104,08	0,183	0,181	53	0,2763076
17,956	534,1	537,6	101,06	104,00	0,183	0,181	54	0,2763511
18,215	534,1	537,6	99,37	102,65	0,182	0,181	55	0,2805245
17,970	534,1	537,6	101,04	104,21	0,183	0,181	56	0,2766791
17,506	534,0	537,5	103,66	106,68	0,183	0,181	57	0,2695395
17,545	534,0	537,6	103,39	106,54	0,183	0,181	58	0,2700974
17,963	534,0	537,5	100,58	103,82	0,183	0,181	59	0,2770489
17,932	534,0	537,5	101,00	104,30	0,183	0,181	60	0,2763078
18,241	534,1	537,5	99,43	102,46	0,183	0,182	61	0,2810957

17,553	534,0	537,5	103,17	106,46	0,183	0,181	62	0,2704898
17,796	534,0	537,6	101,67	104,89	0,183	0,181	63	0,2744462
17,854	534,0	537,6	101,41	104,33	0,183	0,181	64	0,2753779
18,129	533,9	537,6	99,69	102,69	0,183	0,181	65	0,2798152
18,241	533,9	537,6	98,95	102,04	0,183	0,181	66	0,2814611
17,999	533,9	537,5	100,46	103,38	0,183	0,181	67	0,2778511
18,134	533,9	537,5	99,54	102,68	0,183	0,181	68	0,279816
17,749	533,9	537,5	101,69	104,89	0,183	0,181	69	0,27407
17,902	533,9	537,5	100,83	104,03	0,183	0,181	70	0,2763031
18,080	533,9	537,5	99,75	102,80	0,183	0,181	71	0,2792641
17,881	533,9	537,5	100,71	103,67	0,183	0,181	72	0,2763054
17,760	533,9	537,5	101,40	104,60	0,183	0,181	73	0,2744427
18,139	533,9	537,5	99,16	102,09	0,183	0,181	74	0,2805483
17,957	533,9	537,5	100,19	103,51	0,183	0,181	75	0,2775969
17,955	533,8	537,4	100,21	103,27	0,183	0,181	76	0,2776049
17,425	533,8	537,4	103,17	106,19	0,183	0,181	77	0,2695364
18,013	533,8	537,4	99,76	102,58	0,183	0,181	78	0,2788984
18,095	533,8	537,4	99,20	102,32	0,183	0,181	79	0,2801525
18,251	533,8	537,4	98,27	101,41	0,183	0,182	80	0,2827348
17,972	533,7	537,4	99,94	102,80	0,183	0,181	81	0,2783441
17,572	533,7	537,4	102,16	105,51	0,183	0,181	82	0,272041
18,082	533,7	537,4	99,25	102,38	0,183	0,182	83	0,2800075
18,080	533,7	537,4	99,09	102,09	0,183	0,181	84	0,2801771
17,435	533,7	537,3	102,84	106,20	0,183	0,181	85	0,2699181
17,574	533,7	537,3	101,65	104,87	0,183	0,181	86	0,2727552
17,884	533,7	537,3	99,98	103,03	0,183	0,181	87	0,2772163
18,089	533,7	537,3	98,88	101,84	0,183	0,181	88	0,280536
17,811	533,8	537,4	100,40	103,50	0,183	0,181	89	0,276307
17,348	533,8	537,4	103,10	106,17	0,183	0,181	90	0,2690398
18,012	533,7	537,4	99,09	101,84	0,183	0,181	91	0,2795891
18,102	533,7	537,4	98,60	101,62	0,183	0,181	92	0,2810972
17,530	533,6	537,4	101,83	104,73	0,183	0,181	93	0,2721886
17,973	533,6	537,4	98,99	102,06	0,183	0,181	94	0,2792627
17,795	533,6	537,3	100,08	103,13	0,183	0,181	95	0,2766417
17,906	533,5	537,3	99,38	102,59	0,183	0,181	96	0,278456
17,350	533,5	537,3	102,54	105,60	0,183	0,181	97	0,2699172
17,359	533,6	537,3	102,65	105,65	0,183	0,181	98	0,2699168
17,961	533,5	537,3	98,79	101,93	0,183	0,181	99	0,2796175
17,923	533,5	537,2	98,88	101,82	0,183	0,181	100	0,2793103
17,681	533,4	537,2	100,21	103,08	0,183	0,181	101	0,2757378
17,919	533,3	537,2	98,78	101,49	0,183	0,181	102	0,2795462
17,444	533,3	537,1	101,37	104,47	0,183	0,181	103	0,2721875
17,311	533,3	537,1	102,17	105,03	0,183	0,181	104	0,27009
17,779	533,2	537,1	99,30	102,36	0,183	0,181	105	0,2776016
17,427	533,2	537,0	101,19	104,45	0,183	0,181	106	0,2721867
17,812	533,1	537,0	98,90	101,94	0,183	0,181	107	0,2783403
17,626	533,1	536,9	99,93	103,01	0,183	0,181	108	0,2754581
17,719	533,0	536,9	99,36	102,46	0,183	0,181	109	0,2770467
17,330	533,0	536,9	101,70	104,91	0,183	0,182	110	0,2708632
17,548	533,0	536,8	100,57	103,83	0,183	0,182	111	0,2741555
17,301	533,0	536,8	101,79	105,22	0,183	0,182	112	0,2704005
17,753	532,9	536,8	99,23	101,96	0,183	0,181	113	0,2776084
17,974	532,9	536,7	97,82	100,81	0,183	0,181	114	0,2811962
17,815	532,9	536,7	98,41	101,69	0,183	0,182	115	0,2790036
17,321	532,9	536,7	101,34	104,46	0,183	0,182	116	0,2712416
17,684	532,9	536,7	99,17	102,31	0,183	0,181	117	0,2770455
17,467	532,9	536,7	100,47	103,50	0,183	0,182	118	0,2736818
17,437	532,9	536,6	100,62	103,78	0,183	0,182	119	0,2732198
17,182	532,8	536,6	101,92	104,83	0,183	0,181	120	0,2695324
17,521	532,8	536,6	99,79	102,89	0,183	0,181	121	0,274811
17,655	532,8	536,6	98,96	102,18	0,183	0,181	122	0,2770426
17,433	532,7	536,6	100,43	103,33	0,183	0,181	123	0,2735006
17,837	532,7	536,5	98,00	101,00	0,183	0,181	124	0,280064
17,104	532,6	536,5	102,27	105,08	0,183	0,181	125	0,2685768
17,210	532,7	536,5	101,40	104,48	0,183	0,181	126	0,2704823
17,612	532,7	536,5	98,96	102,02	0,183	0,181	127	0,2767082
17,459	532,7	536,5	99,86	103,07	0,183	0,182	128	0,2743769
17,903	532,7	536,4	97,43	100,44	0,183	0,182	129	0,2814531
17,389	532,6	536,5	100,28	103,22	0,183	0,182	130	0,2734986

17,887	532,5	536,4	97,29	100,34	0,183	0,182	131	0,2814527
17,794	532,5	536,4	97,73	100,40	0,183	0,181	132	0,2801736
17,913	532,4	536,4	97,15	100,11	0,183	0,181	133	0,2819987
17,725	532,3	536,3	98,20	101,26	0,183	0,182	134	0,2788871
17,115	532,3	536,3	101,67	104,69	0,183	0,182	135	0,2695271
17,839	532,3	536,2	97,52	100,21	0,183	0,182	136	0,2810859
17,559	532,2	536,3	98,85	101,72	0,183	0,181	137	0,276668
17,397	532,2	536,3	99,91	103,01	0,183	0,182	138	0,2740596
17,051	532,2	536,2	101,89	105,21	0,183	0,182	139	0,2685727
17,213	532,1	536,2	100,91	103,70	0,183	0,182	140	0,271235
17,162	532,1	536,2	101,18	104,25	0,183	0,181	141	0,2704781
17,307	532,1	536,1	100,47	103,32	0,183	0,182	142	0,2727413
17,493	532,1	536,1	99,12	102,14	0,183	0,182	143	0,2757388
17,433	532,2	536,2	99,48	102,49	0,183	0,182	144	0,2748095
17,059	532,2	536,2	101,64	104,72	0,183	0,182	145	0,2689533
17,655	532,3	536,2	98,14	101,02	0,183	0,181	146	0,2783318
17,818	532,3	536,2	97,33	100,30	0,183	0,182	147	0,2810838
17,648	532,2	536,1	97,93	100,93	0,183	0,182	148	0,2785252
17,425	532,2	536,1	99,27	102,58	0,183	0,182	149	0,2750185
17,908	532,2	536,1	96,51	99,43	0,183	0,182	150	0,2827323
17,356	532,2	536,1	99,54	102,51	0,183	0,181	151	0,2740567
17,780	532,3	536,2	97,39	100,38	0,183	0,182	152	0,2805346
17,727	532,3	536,1	97,68	100,40	0,183	0,181	153	0,2798043
17,236	532,2	536,1	100,37	103,39	0,183	0,181	154	0,2721776
17,379	532,1	536,0	99,57	102,37	0,183	0,182	155	0,2744299
17,368	532,1	535,9	99,66	102,31	0,183	0,181	156	0,27443
17,881	532,0	536,0	96,43	99,69	0,183	0,182	157	0,2827209
17,785	532,0	535,9	97,23	100,12	0,183	0,182	158	0,2810478
17,256	532,0	535,9	100,21	103,01	0,183	0,182	159	0,272741
17,020	531,9	535,9	101,62	104,52	0,184	0,182	160	0,2689524
17,308	531,9	535,9	99,80	102,81	0,183	0,182	161	0,2734912
17,805	531,9	535,9	97,01	100,16	0,183	0,182	162	0,2814459
17,742	531,9	535,9	97,08	100,24	0,183	0,182	163	0,2805323
17,639	531,9	535,9	97,90	100,63	0,183	0,182	164	0,2788802
17,834	531,8	535,9	96,74	99,55	0,183	0,181	165	0,2820198
17,127	531,8	535,9	100,58	103,58	0,183	0,181	166	0,2708513
17,296	531,8	535,8	99,76	102,80	0,183	0,182	167	0,2734912
17,777	531,8	535,8	97,02	100,16	0,183	0,182	168	0,2810802
17,738	531,9	535,9	97,26	99,98	0,183	0,182	169	0,2805337
17,740	531,9	535,9	97,01	100,18	0,183	0,182	170	0,2806857
17,719	531,9	535,8	97,41	100,13	0,183	0,182	171	0,280166
17,240	531,9	535,8	99,89	102,57	0,183	0,181	172	0,2727387
17,704	531,8	535,8	97,49	100,29	0,183	0,181	173	0,2801666
17,451	531,8	535,8	98,77	101,54	0,183	0,182	174	0,276062
17,223	531,7	535,7	100,22	103,12	0,183	0,182	175	0,2724353
17,648	531,7	535,7	97,70	100,15	0,184	0,181	176	0,2793343
17,335	531,7	535,7	99,24	102,39	0,183	0,181	177	0,2744287
17,320	531,6	535,7	99,53	102,47	0,183	0,182	178	0,2740522
17,763	531,6	535,7	97,00	100,18	0,183	0,182	179	0,281073
17,117	531,6	535,7	100,75	103,66	0,183	0,182	180	0,2708492
17,682	531,7	535,7	97,43	100,42	0,183	0,182	181	0,2797982
17,644	531,7	535,7	97,53	100,69	0,183	0,182	182	0,2792462
17,028	531,7	535,7	101,40	104,10	0,183	0,182	183	0,2695211
17,535	531,6	535,7	98,07	101,01	0,183	0,182	184	0,2775885
17,781	531,7	535,7	96,94	99,55	0,183	0,181	185	0,2814448
17,416	531,7	535,7	98,99	101,63	0,184	0,181	186	0,2757332
17,330	531,7	535,7	99,28	102,48	0,183	0,182	187	0,2744271
17,368	531,7	535,6	99,15	102,15	0,183	0,182	188	0,2750659
17,974	531,6	535,6	95,60	98,61	0,183	0,182	189	0,2848838
17,741	531,7	535,7	96,93	99,59	0,183	0,182	190	0,2810779
17,104	531,7	535,7	100,56	103,67	0,183	0,182	191	0,2708476
17,586	531,7	535,7	97,82	100,71	0,183	0,182	192	0,2784878
17,714	531,7	535,7	97,13	99,92	0,183	0,182	193	0,2805216
17,767	531,8	535,7	96,78	99,50	0,183	0,181	194	0,2814423
17,298	531,7	535,6	99,31	102,25	0,183	0,181	195	0,2740505
17,462	531,7	535,6	98,37	101,31	0,183	0,182	196	0,2767824
17,450	531,6	535,5	98,49	101,32	0,183	0,182	197	0,2766036
17,679	531,6	535,6	97,29	100,19	0,183	0,182	198	0,2801622
17,338	531,6	535,5	99,12	101,91	0,183	0,182	199	0,2747977

17,344	531,5	535,5	99,08	101,94	0,183	0,181	200	0,2747978
17,253	531,4	535,3	99,59	102,59	0,183	0,182	201	0,2734404
17,647	531,3	535,3	97,25	99,99	0,183	0,182	202	0,2797852
17,472	531,3	535,3	98,37	101,47	0,183	0,182	203	0,2770311
17,251	531,2	535,2	99,68	102,71	0,184	0,182	204	0,2734895
17,178	531,2	535,1	100,26	103,08	0,184	0,182	205	0,2721717
17,001	531,1	535,1	101,10	104,18	0,184	0,182	206	0,2694513
17,311	531,1	535,0	99,35	102,07	0,184	0,182	207	0,2744215
17,807	531,1	535,0	96,68	99,22	0,184	0,182	208	0,2823531
17,197	531,1	535,0	99,86	102,79	0,184	0,182	209	0,2727365
17,674	531,1	535,0	97,22	100,12	0,183	0,182	210	0,2801618
18,021	531,0	534,9	95,22	98,12	0,183	0,182	211	0,2857798
17,688	530,9	534,8	96,91	99,93	0,183	0,182	212	0,2805281
17,166	530,9	534,8	100,22	103,11	0,183	0,182	213	0,2721707
17,687	530,8	534,7	97,12	99,87	0,184	0,182	214	0,2805209
17,197	530,7	534,7	99,79	102,85	0,184	0,182	215	0,2727817
17,245	530,7	534,7	99,68	102,52	0,184	0,182	216	0,2734889
17,282	530,7	534,7	99,56	102,18	0,184	0,182	217	0,2740446
17,667	530,7	534,8	97,18	100,11	0,184	0,182	218	0,2801614
17,091	530,8	534,8	100,53	103,55	0,183	0,182	219	0,2708584
17,564	530,8	534,8	97,96	100,72	0,183	0,182	220	0,2783308
17,691	530,8	534,8	96,98	100,04	0,183	0,182	221	0,2805268
17,204	530,8	534,9	99,93	102,85	0,183	0,182	222	0,2727358
17,178	530,8	534,9	100,05	103,03	0,183	0,182	223	0,2722734
17,317	530,8	534,9	99,19	102,04	0,183	0,182	224	0,2746192
17,643	530,8	534,8	97,35	99,99	0,184	0,182	225	0,2797953
17,253	530,7	534,8	99,67	102,63	0,184	0,182	226	0,2734882
17,164	530,6	534,7	100,19	103,17	0,184	0,182	227	0,2721711
16,886	530,6	534,7	101,82	104,83	0,184	0,182	228	0,2676908
17,038	530,6	534,6	101,10	104,22	0,184	0,182	229	0,2699728
16,963	530,5	534,7	101,37	104,32	0,184	0,182	230	0,2689473
17,209	530,5	534,7	99,98	102,79	0,184	0,182	231	0,2727315
17,753	530,5	534,7	96,93	99,68	0,184	0,182	232	0,2814397
17,702	530,6	534,7	97,25	100,09	0,184	0,182	233	0,2805875
17,746	530,6	534,6	96,92	99,74	0,184	0,182	234	0,2814443
17,065	530,5	534,5	100,87	103,93	0,184	0,182	235	0,2704672
17,315	530,5	534,5	99,53	102,15	0,184	0,182	236	0,2744229
17,499	530,5	534,5	98,18	101,23	0,184	0,182	237	0,2775841
16,905	530,4	534,5	101,63	104,57	0,184	0,182	238	0,2681652
17,606	530,4	534,5	97,73	100,50	0,184	0,182	239	0,2792472
17,643	530,4	534,6	97,19	100,04	0,184	0,182	240	0,2799154
16,995	530,3	534,5	101,25	103,96	0,184	0,182	241	0,2696272
17,665	530,3	534,5	97,40	100,21	0,184	0,182	242	0,2801177
17,804	530,3	534,5	96,64	99,32	0,184	0,182	243	0,2823503
17,734	530,3	534,5	96,67	99,79	0,184	0,182	244	0,2814397
17,820	530,3	534,5	96,40	99,38	0,184	0,182	245	0,2827129
16,987	530,3	534,5	101,14	104,18	0,184	0,182	246	0,2694941
17,734	530,3	534,5	96,90	99,48	0,184	0,182	247	0,281439
17,292	530,2	534,5	99,23	102,20	0,184	0,182	248	0,2744226
17,540	530,2	534,5	97,79	100,81	0,184	0,182	249	0,2783228
17,737	530,2	534,5	96,70	99,73	0,183	0,182	250	0,2814404

APPENDIX 3: Calibration data

ITEM	EQUIPMENT TYPE	MANUFACTURER	EQUIPMENT #	CALIBRATION DATE	COMPLIES WITH STANDARD REQUIREMENTS
1	analytical scale 200gr.	Ohaus	EM-051	2021 January	Y
2	Dry gas meter	Shinagwa corporation	EM-178	2021 January	Y
3	Dry gas meter	Shinagwa corporation	EM-179	2021 January	Y
4	Dry gas meter	Shinagwa corporation	EM-318	2021 January	Y
5	20 channel card thermocouples	Keithley	EM-015	2021 March	Y
6	20 channel card thermocouples	Keithley	EM-154	2021 March	Y
7	barometer	Control company	EM-304	2020 October	Y
8	Calibration block	Delmhorst	EM-191	2020 December	Y
9	Digital Manometer	Dwyer	EM-006	2021 March	Y
10	Digital Manometer	Dwyer	EM-249	2021 March	Y
11	Data acquisition System	Keithley	EM-147	2021 March	Y
12	Weight 2kg	na	EM-090	2018 January	Y
13	Scale 0-1000lbs Rough Deck	Rice lake	EM-114/ EM-137	2020 November	Y
14	Vacuum gauge	Dwyer	EM-126	2021 March	Y
15	Vacuum gauge	Dwyer	EM-127	2021 March	Y
16	Calibration weight 100mg	Troemer	EM-128	2018 January	y
17	Calibration weight 200g	Troemer	EM-129	2018 January	Y
18	Reference Dry gas meter	American meter	EM-130	2021 January	Y
19	Temperature humidity meter	Fluke	EM-136	2021 March	Y
27	Measuring tape	Stanley	EM-224	2021 March	Y
28	Chronometer	Extech	EM-175	2020 December	Y
31	Calibration gas	Praxair	EM-275	2017 August	Y
32	Calibration gas	Praxair	EM-276	2017 August	Y
33	Thermometer	Fluke	EM-001	2021 March	Y

Calibration Certificate ID
CA0123-205-012721-ACC-USL

METTLER TOLEDO

Mettler-Toledo Inc.
Service Division
1900 Polaris Parkway
Columbus, OH 43240
1-800-METTLER

Accredited by the American Association for Laboratory Accreditation (A2LA)
CALIBRATION CERT #1788.01

ISO 17025 Accredited
ANSI/NCSL Z540-1 Accredited

Accuracy Calibration Certificate

Customer

Company:	Services Polytests		
Address:	695-B Rue Gaudette		
City:	Saint-Jean-Sur-Richelieu	Contact:	Danick Power
Zip / Postal:	J3B 7S7		
State / Province:	Quebec		

Weighing Device

Manufacturer:	Ohaus	Instrument Type:	Weighing Instrument
Model:	AR2140	Asset Number:	EM-051
Serial No.:	M3658329010091	Terminal Model:	N/A
Building:	N/A	Terminal Serial No.:	N/A
Floor:	N/A	Terminal Asset No.:	N/A
Room:	N/A		

Range	Max. Capacity	Readability (d)
1	210 g	0.0001 g

Procedure

Calibration Guideline:	EURAMET cg-18 v. 4.0 (11/2015)
METTLER TOLEDO Work Instruction:	30260953

This calibration certificate contains measurements for As Found and As Left calibrations.

The sensitivity/span of the weighing instrument was adjusted before As Left calibration with an external weight. As Left 472

In accordance with EURAMET cg-18 (11/2015), the test loads were selected to reflect the specific use of the weighing device or to accommodate specific calibration conditions.

	Temperature	
As Found	Start: 26.0 °C	End: 26.0 °C
As Left	Start: 26.0 °C	End: 26.0 °C

Environmental conditions have been verified to ensure the accuracy of the calibration.

This certificate is issued in accordance with the conditions of accreditation granted by A2LA, which is based on ISO/IEC 17025. A2LA has assessed the measurement capability of the laboratory and its traceability to recognized national standards.

As Found Calibration Date:	27-01-2021
As Left Calibration Date:	27-01-2021
Issue Date:	27-01-2021
Requested Next Calibration Date:	31-01-2022

Authorized A2LA Signatory:

Kamel Mohand Kaci

2021-01-27

Measurement Results

Repeatability

Test Load: 100 g

	As Found	As Left
1	100.0008 g	100.0003 g
2	100.0007 g	100.0004 g
3	100.0007 g	100.0003 g
4	100.0008 g	100.0005 g
5	100.0007 g	100.0004 g
6	100.0008 g	100.0003 g
7	100.0007 g	100.0003 g
8	100.0008 g	100.0003 g
9	100.0006 g	100.0004 g
10	100.0007 g	100.0004 g

Standard Deviation	0.00007 g	0.00007 g

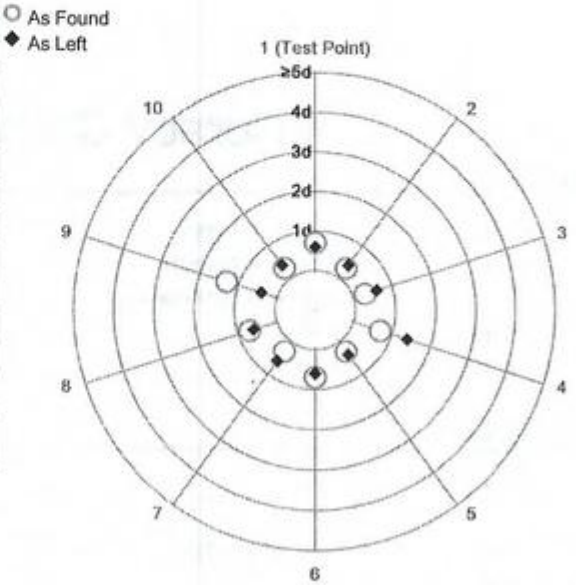

The "d" in the graph represents the readability of the range/interval in which the test was performed.

The results of this graph are based upon the absolute values of the differences from the mean value.

Eccentricity

Test Load: 100 g

Position	As Found	As Left
1	0.0000 g	0.0000 g
2	0.0000 g	0.0000 g
3	0.0000 g	0.0000 g
4	0.0000 g	0.0000 g
5	0.0000 g	0.0000 g

Maximum Deviation	0.0000 g	0.0000 g

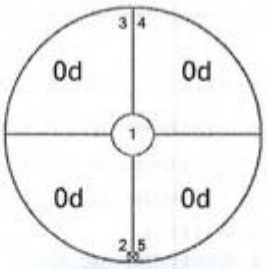

As Found

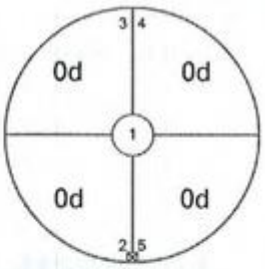

As Left

The "d" in the graph represents the readability of the range/interval in which the test was performed.

Error of Indication

As Found

	Reference Value	Indication	Error of Indication	Expanded Uncertainty	k
1	0.0000 g	0.0000 g	0.0000 g	0.15 mg	2
2	50.0000 g	50.0003 g	0.0003 g	0.27 mg	2
3	100.0000 g	100.0008 g	0.0008 g	0.46 mg	2
4	150.0000 g	150.0008 g	0.0008 g	0.67 mg	2
5	200.0001 g	200.0009 g	0.0008 g	0.84 mg	2

As Left

	Reference Value	Indication	Error of Indication	Expanded Uncertainty	k
1	0.0000 g	0.0000 g	0.0000 g	0.15 mg	2
2	50.0000 g	50.0001 g	0.0001 g	0.19 mg	2
3	100.0000 g	100.0002 g	0.0002 g	0.26 mg	2
4	150.0000 g	150.0000 g	0.0000 g	0.34 mg	2
5	200.0001 g	199.9999 g	-0.0002 g	0.36 mg	2

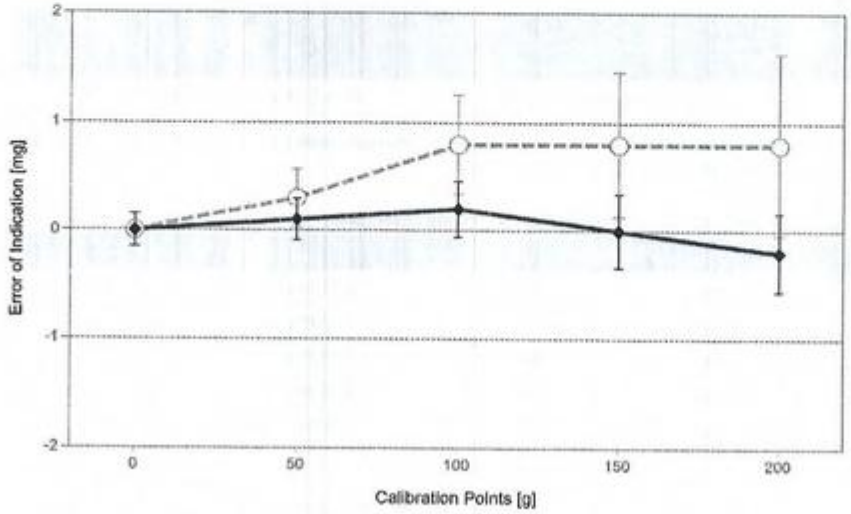

○ As Found

◆ As Left

For improved legibility of the graphics only increasing measurement points are shown and measurement points close to zero are not displayed.

The uncertainty stated is the expanded uncertainty at calibration obtained by multiplying the standard combined uncertainty by the coverage factor k – which can be larger than 2 according to EURAMET cg-18. The value of the measurand lies within the assigned range of values with a probability of approximately 95%.

The user is responsible for maintaining environmental conditions and the settings of the weighing instrument when it was calibrated.

Test Equipment

All weights used for metrological testing are traceable to national or international standards. The weights were calibrated and certified by an accredited calibration laboratory.

Weight Set 1: OIML E2

Weight Set No.:	472	Date of Issue:	28-02-2020
Certificate Number:	01127534-1	Calibration Due Date:	28-02-2021

Remarks

calibration faite selon tolerances du fabricant METTLER TOLEDO pour un model comparable: AB204

End of Accredited Section

The information below and any attachments to this calibration certificate are not part of the accredited calibration.

Measurement Uncertainty of the Weighing Instrument in Use

Stated is the expanded uncertainty with k=2 in use. The formula shall be used for the estimation of the uncertainty under consideration of the errors of indication. The value R represents the net load indication in the unit of measure of the device.

Temperature coefficient for the evaluation of the measurement uncertainty in use: $3.0 \cdot 10^{-6}$ / K

Temperature range on site for the evaluation of the measurement uncertainty in use: 4 K

Linearization of Uncertainty Equation

	Range		As Found	As Left
	d	Max		
1	0.0001 g	210 g	U_1 = 0.16 mg + 0.0149 mg/g · R	U_1 = 0.16 mg + 0.00798 mg/g · R

To optimize the stability of the linearization, besides of the zero load only increasing measurement points with a test load of 5% of the measurement range or larger are taken for the calculation of the linear equation.

Absolute and Relative Measurement Uncertainty in Use for Various Net Indications (Examples)

Net Indication	As Found		As Left	
0.0210 g	0.16 mg	0.76%	0.16 mg	0.76%
0.2100 g	0.16 mg	0.078%	0.16 mg	0.077%
2.1000 g	0.19 mg	0.0091%	0.18 mg	0.0084%
21.0000 g	0.47 mg	0.0023%	0.33 mg	0.0016%
210.0000 g	3.3 mg	0.0016%	1.8 mg	0.00087%

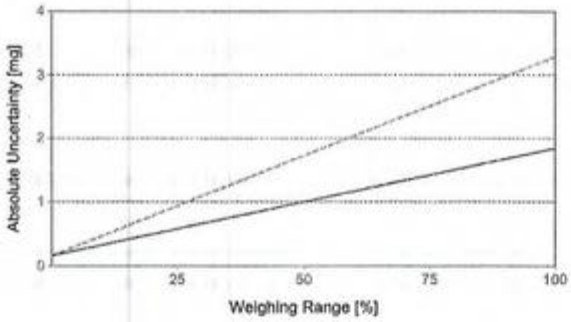

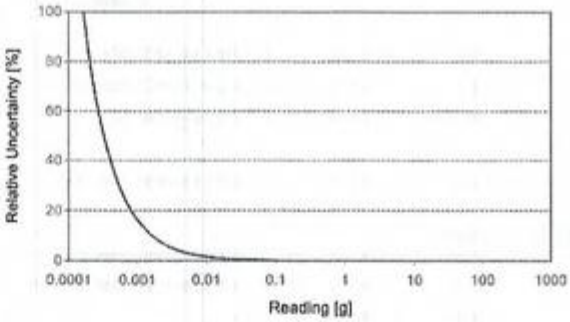

As Found — As Left

METTLER TOLEDO Service

Custom Tolerance Assessment

Assessment done without considering measurement uncertainty.

One or more of the measurements from the attached calibration certificate were assessed against customer-defined tolerances.

	As Found	As Left
Overall	✗	✓
Repeatability	✓	✓
Eccentricity	✓	✓
Error of Indication	✗	✓

Measurement Results

Repeatability

Test Load: 100 g

	As Found	As Left
1	100.0008 g	100.0003 g
2	100.0007 g	100.0004 g
3	100.0007 g	100.0003 g
4	100.0008 g	100.0005 g
5	100.0007 g	100.0004 g
6	100.0008 g	100.0003 g
7	100.0007 g	100.0003 g
8	100.0008 g	100.0003 g
9	100.0006 g	100.0004 g
10	100.0007 g	100.0004 g

Standard Deviation	0.00007 g	0.00007 g
Tolerance	0.00010 g ✓	0.00010 g ✓

Eccentricity

Test Load: 100 g

Position	As Found	As Left
1	0.0000 g	0.0000 g
2	0.0000 g	0.0000 g
3	0.0000 g	0.0000 g
4	0.0000 g	0.0000 g
5	0.0000 g	0.0000 g

Maximum Deviation	0.0000 g	0.0000 g
Tolerance	0.0003 g ✓	0.0003 g ✓

Error of Indication

As Found

	Reference Value	Indication	Error of Indication	Tolerance	
1	0.0000 g	0.0000 g	0.0000 g	0.0001 g	✓
2	50.0000 g	50.0003 g	0.0003 g	0.0003 g	✓
3	100.0000 g	100.0008 g	0.0008 g	0.0006 g	✗
4	150.0000 g	150.0008 g	0.0008 g	0.0009 g	✓
5	200.0001 g	200.0009 g	0.0008 g	0.0012 g	✓

As Left

	Reference Value	Indication	Error of Indication	Tolerance	
1	0.0000 g	0.0000 g	0.0000 g	0.0001 g	✓
2	50.0000 g	50.0001 g	0.0001 g	0.0003 g	✓
3	100.0000 g	100.0002 g	0.0002 g	0.0006 g	✓
4	150.0000 g	150.0000 g	0.0000 g	0.0009 g	✓
5	200.0001 g	199.9999 g	-0.0002 g	0.0012 g	✓

POLYCONTROLS
INTEGRATION • CALIBRATION • INSTRUMENTATION

CLAS NRC-CNRC CLAS 2009-02

SCC Accredited LAB Accredited CCN #655

CERTIFICAT D'ÉTALONNAGE # 13437

Date d'étalonnage : 2020-12-22
Date d'émission du certificat : 2020-12-23

Services Polytests
695 B Gaudette street
St-Jean-sur-Richelieu, Québec, Canada
J3B 7S7

Étalonnage d'un
Débitmètre à déplacement positif Shinigawa DCSDa-2C S/N : S8020

CONFORMITÉ AU PROGRAMME DE QUALITÉ

Tous les étalonnages sont effectués conformément au manuel d'assurance qualité de Polycontrols qui est conforme à la norme ISO/IEC 17025: 2017, à la norme ISO 9001 – 2015 ainsi qu'à toutes autres exigences de qualité définies dans la description d'achat des clients. Les résultats ne sont valides que pour l'objet soumis à l'essai ou à l'étalonnage. Si applicable, la règle de décision est décrite au certificat.

TRAÇABILITÉ

La traçabilité des étalons de débit au National Institute of Standards and Technology, NIST, est maintenue par les laboratoires de Fluke Corporation de Phoenix, Arizona et est conforme aux normes ISO/IEC 17025, ANSI/NCSL Z540-1-1994, ISO-10012-1, MIL-STD 45662A.

Le Service d'évaluation des laboratoires d'étalonnage (CLAS) du Conseil national de recherches du Canada (CNRC) a évalué et certifié la capacité d'étalonnage du laboratoire et la traçabilité au Système international d'unités (SI) ou à des étalons acceptables selon le CLAS. Le présent certificat d'étalonnage est délivré conformément aux conditions de certification du CLAS et aux conditions d'accréditation du Conseil canadien des normes (CCN). Le CLAS et le CCN ne garantissent pas l'exactitude des étalonnages individuels effectués par les laboratoires accrédités.

APTITUDE EN MATIÈRE DE MESURE ET D'ÉTALONNAGE - CMC

Les rendements métrologiques d'étalonnage ont une incertitude de ±0.2% de la lecture pour les mesures entre 5 SCCM à 10 SLPM, ±0.3% de la lecture pour les mesures entre 10 SLPM à 30 SLPM, ±0.2% de la lecture pour les mesures entre 30 SLPM à 3000 SLPM, ±0.3% de la lecture pour les mesures supérieures à 3000 SLPM jusqu'à 6000 SLPM et ±0.5% pour les mesures inférieures à 5 SCCM jusqu'à concurrence de 1 SCCM, équivalent air ou azote. Les incertitudes exprimées sont élargies avec un facteur d'élargissement k = 2, et ce, pour un niveau de confiance d'environ 95 %, dans l'hypothèse d'une distribution normale incluant la résolution de l'instrument. Le rapport d'incertitude des essais (RIE) de cet étalonnage respecte un ratio de 4:1 à moins d'indication contraire.

SOMMAIRE DES CONDITIONS DE L'INSTRUMENT EN TEST

Conditions initiales	En bon état
Travail Effectué	Étalonnage de l'instrument.
Résultats	Lectures initiales dans/hors tolérances-conditionnel avec K facteur de 1.02
	Lectures finales dans les tolérances sans K facteur
Remarques	Fréquence d'étalonnage aux 12 mois

Bernard Poirier
Métrologiste

Responsable du laboratoire

POLYCONTROLS
INTEGRATION • CALIBRATION • INSTRUMENTATION

CLAS NRC·CNRC CLAS 2009-02

SCC Accredited LAB #655

Certificat d'étalonnage # 13437

Numéro de série:	S8020	Station de mesure:	3
Date d'étalonnage:	2020-12-22	Procédure:	POS-CAL-005
Identification de l'instrument:	EM 318	Règle de décision:	Méthode #3

Instrument de mesure de référence utilisé pour l'étalonnage initial

Description	Modèle	# Série	Traçabilité	Date dû
Fluke molbloc_30 slpm	3E4-VCR-V-Q	2403	1500285594	2021-06-10
Fluke molbox1	Molbox1	755	1500285062	2021-06-09
RTD Mist	M22	2208102	2020003043	2021-04-23
Module 44.5 PSI avec Baro 163671	Module 30	160659	2020003156	2021-04-28

Spécifications initiales de l'appareil		Condition d'étalonnage	
Gaz	Air	Gaz	Air
Température d'opération		Température ambiante	20 °C
Pression à l'entrée		Pression ambiante	1000.67 mbar
Pression à la sortie		Orientation	
Température de référence		Élastomère	
Pression de référence		Valve	
Étendue d'échelle	10-2000 ALH		
Signaux Entrée/Sortie	-		
Alimentation			
Tolérance ±2 %O.R.			

Lectures initiales

Débit du test ALH	Instrument en test L	Valeurs mesurées Pression PSIA	Valeurs mesurées Température °C	Valeurs mesurées Référence L	Référence calculée L	Erreur calculée L	Tolérance acceptable L	Incertitude k = 2 L	TUR
402.2104	68.1309	14.5217	20.09	66.3221	66.8849	1.2460	1.3377	0.2216	>4
701.6001	119.1870	14.5233	20.03	115.6677	116.6124	2.5746	2.3322	0.3863	>4
1580.7486	268.4946	14.5355	19.98	261.3017	263.1697	5.3249	5.2634	0.8718	>4

POLYCONTROLS
INTEGRATION • CALIBRATION • INSTRUMENTATION

CLAS NRC·CNRC CLAS 2009-02

SCC Accredited LAB #655

Certificat d'étalonnage # 13437

Numéro de série:	S8020	Station de mesure:	3
Date d'étalonnage:	2020-12-22	Procédure:	POS-CAL-005
Identification de l'instrument:	EM 318	Règle de décision:	Méthode #3

Résultats initiaux

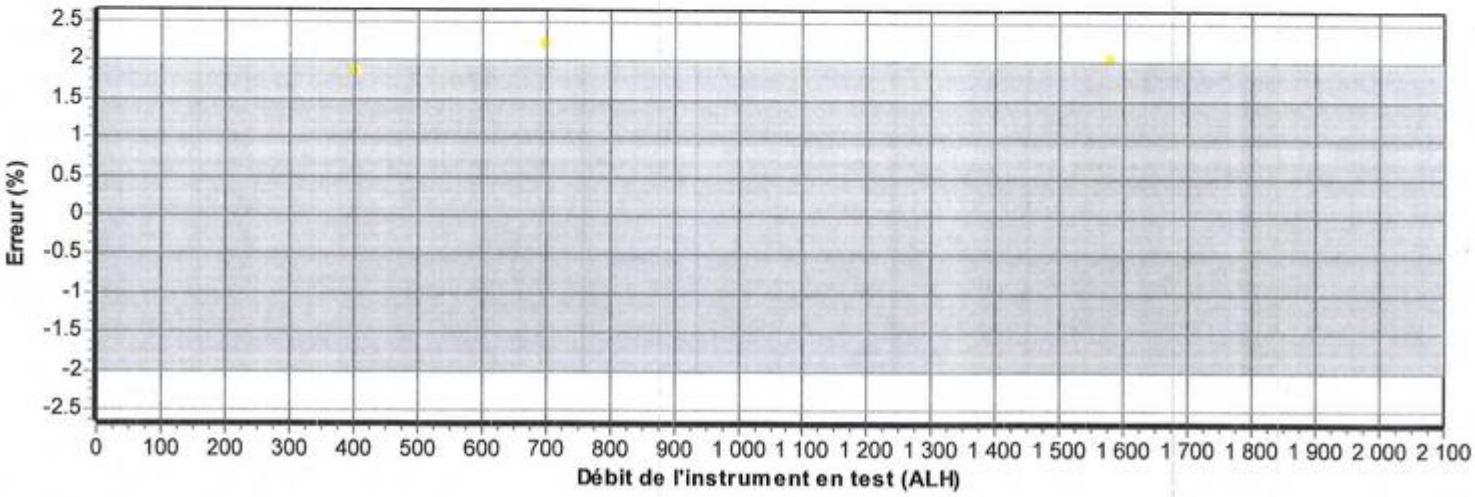

Voir l'annexe pour la règle de décision

POLYCONTROLS
INTEGRATION • CALIBRATION • INSTRUMENTATION

CLAS NRC-CNRC CLAS 2009-02

SCC Accredited LAB #655

Certificat d'étalonnage # 13437

Numéro de série:	S8020	Station de mesure:	3
Date d'étalonnage:	2020-12-22	Procédure:	POS-CAL-005
Identification de l'instrument:	EM 318	Règle de décision:	Méthode #3

Instrument de mesure de référence utilisé pour l'étalonnage final

Description	Modèle	# Série	Traçabilité	Date dû
Fluke molbloc_30 slpm	3E4-VCR-V-Q	2403	1500285594	2021-06-10
Fluke molbox1	Molbox1	755	1500285062	2021-06-09
RTD Mist	M22	2208102	2020003043	2021-04-23
Module 44.5 PSI avec Baro 163671	Module 30	160659	2020003156	2021-04-28

Spécifications finales de l'appareil		Condition d'étalonnage	
Gaz	Air	Gaz	Air
Température d'opération		Température ambiante	20 °C
Pression à l'entrée		Pression ambiante	1000.6 mbar
Pression à la sortie		Orientation	
Température de référence		Élastomère	
Pression de référence		Valve	
Étendue d'échelle	10-2000 ALH		
Signaux Entrée/Sortie	-		
Alimentation			
Tolérance ±2 %O.R.			

Lectures finales

Débit du test ALH	Instrument en test L	Valeurs mesurées Pression PSIA	Température °C	Référence L	Référence calculée L	Erreur calculée L	Tolérance acceptable L	Incertitude k = 2 L	TUR
402.2166	66.7950	14.5217	20.09	66.3221	66.8857	-0.0907	1.3377	0.2216	>4
701.6108	116.8500	14.5233	20.03	115.6677	116.6139	0.2361	2.3323	0.3863	>4
1580.7591	263.2300	14.5355	19.98	261.3017	263.1716	0.0584	5.2634	0.8718	>4

Fc : 1,00136

2021-01-12

POLYCONTROLS
INTEGRATION • CALIBRATION • INSTRUMENTATION

CLAS
NRC·CNRC
CLAS 2009-02

SCC Accredited LAB
LAB Accreditation
#655

Certificat d'étalonnage # 13437

Numéro de série:	S8020	Station de mesure:	3
Date d'étalonnage:	2020-12-22	Procédure:	POS-CAL-005
Identification de l'instrument:	EM 318	Règle de décision:	Méthode #3

Résultats finaux

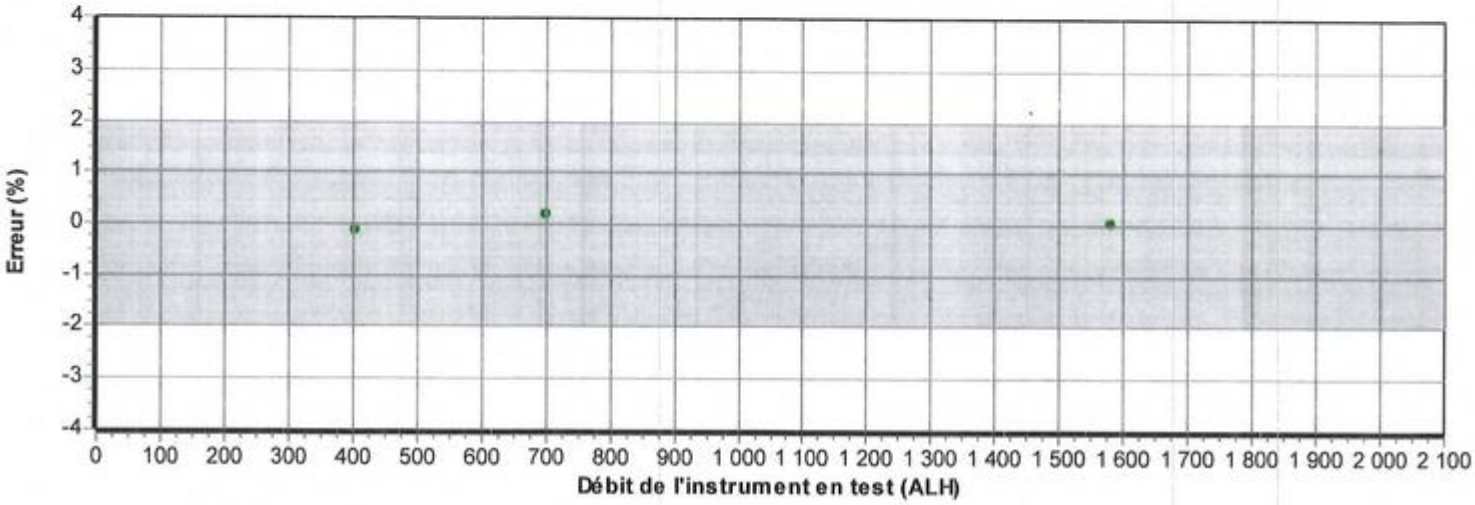

Voir l'annexe pour la règle de décision

2021. 01. 12

Annexe pour la règle de décision

Méthode 3 Statut de Conformité Non-binaire avec Bande de Garde en considérant l'incertitude de la mesure directement

Cette méthode tient compte d'une bande de garde pour définir l'intervalle acceptable et de rejet. La limite acceptable du résultat de la mesure est calculée selon la méthode mathématique suivante AL = TL – w et de rejet RL = TL + w, dont w = rU. Le multiple r de l'incertitude combiné élargie U peut être défini selon la table 1 section 5.2 du document ILAC G8 : 2019. L'incertitude de la mesure U est une incertitude combinée élargie ayant un niveau de confiance de 95% (k = 2). La règle de conformité non-binaire avec bande de garde est définie lorsqu'il y a quatre choix sur le statut de l'essai : dans la tolérance, acceptation conditionnelle, rejet conditionnel, et hors tolérance.

Les conformités de l'essai sont définies telles que :

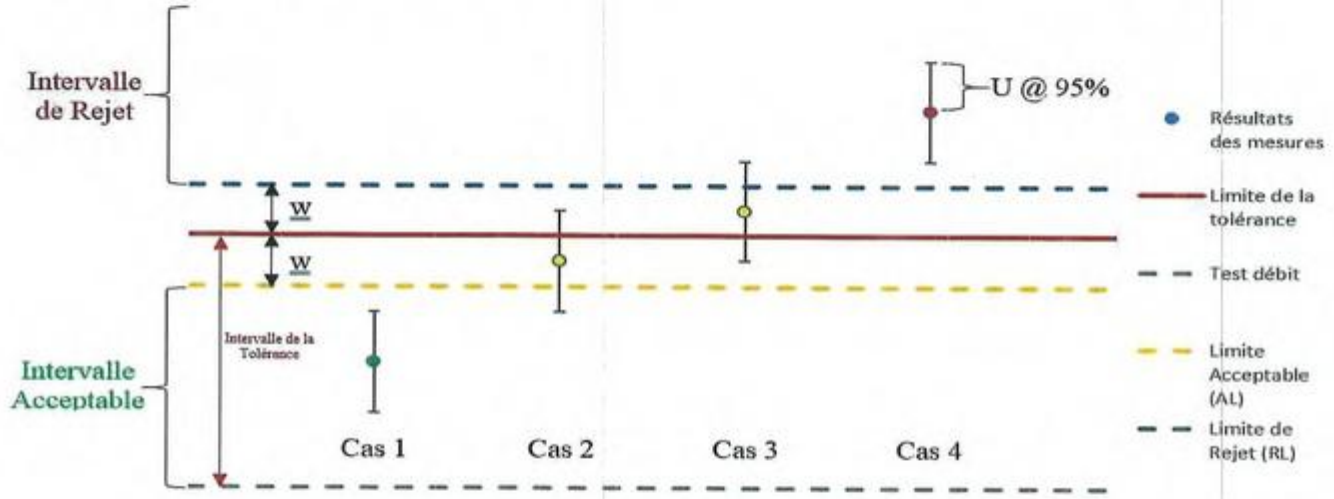

Explication de la règle Non-Binaire avec Bande de Garde

Cas 1 – *Inférieur à la limite acceptable AL*, ***Statut : Dans les tolérances (In tolerance).***

- Le résultat de la mesure est à l'intérieur de l'intervalle acceptable. Cependant, l'estimation du risque en assumant la probabilité d'une distribution normale d'être à l'extérieur de la limite de la tolérance est < 2.5%. L'incertitude de l'essai est directement prise en considération. Couleur verte.

Cas 2 – *Inférieur à la limite de la tolérance TL, supérieur à la limite acceptable AL*, ***Statut : Dans les tolérances-Conditionnel.***

- Le résultat de la mesure est à l'extérieur de l'intervalle acceptable mais inférieur à la limite de la tolérance. Cependant, la valeur observée est située dans la bande de garde w = TL-AL et le statut du résultat est conditionnel à l'évaluation du risque du client. L'incertitude de la mesure est directement prise en considération. Couleur jaune.

Cas 3 – *Supérieur à la limite de la tolérance, inférieur à RL*, ***Statut : Hors tolérance-Conditionnel.***

- Le résultat de la mesure est supérieur à la limite de la tolérance mais à l'extérieur de l'intervalle de rejet. Cependant, la valeur observée est située dans la bande de garde w = TL-RL et le statut du résultat est conditionnel à l'évaluation du risque du client. L'incertitude de la mesure est directement prise en considération. Couleur jaune.

Cas 4 – *Supérieur à la limite de rejet RL*, ***Statut : Hors-tolérance (Out of tolerance).***

- Le résultat de la mesure est à l'intérieur de l'intervalle de rejet. L'incertitude de l'essai est directement prise en considération. Couleur rouge.

POLYCONTROLS
INTEGRATION • CALIBRATION • INSTRUMENTATION

CLAS NRC·CNRC CLAS 2009-02

SCC Accredited LAB Accredited CCN #655

CERTIFICAT D'ÉTALONNAGE # 13439

Date d'étalonnage : 2020-12-22
Date d'émission du certificat : 2020-12-23

Services Polytests
695 B Gaudette street
St-Jean-sur-Richelieu, Québec, Canada
J3B 7S7

Étalonnage d'un
Shinigawa DCDa-2c S/N : 23544

CONFORMITÉ AU PROGRAMME DE QUALITÉ

Tous les étalonnages sont effectués conformément au manuel d'assurance qualité de Polycontrols qui est conforme à la norme ISO/IEC 17025: 2017, à la norme ISO 9001 – 2015 ainsi qu'à toutes autres exigences de qualité définies dans la description d'achat des clients. Les résultats ne sont valides que pour l'objet soumis à l'essai ou à l'étalonnage. Si applicable, la règle de décision est décrite au certificat.

TRAÇABILITÉ

La traçabilité des étalons de débit au National Institute of Standards and Technology, NIST, est maintenue par les laboratoires de Fluke Corporation de Phoenix, Arizona et est conforme aux normes ISO/IEC 17025, ANSI/NCSL Z540-1-1994, ISO-10012-1, MIL-STD 45662A.

Le Service d'évaluation des laboratoires d'étalonnage (CLAS) du Conseil national de recherches du Canada (CNRC) a évalué et certifié la capacité d'étalonnage du laboratoire et la traçabilité au Système international d'unités (SI) ou à des étalons acceptables selon le CLAS. Le présent certificat d'étalonnage est délivré conformément aux conditions de certification du CLAS et aux conditions d'accréditation du Conseil canadien des normes (CCN). Le CLAS et le CCN ne garantissent pas l'exactitude des étalonnages individuels effectués par les laboratoires accrédités.

APTITUDE EN MATIÈRE DE MESURE ET D'ÉTALONNAGE - CMC

Les rendements métrologiques d'étalonnage ont une incertitude de ±0.2% de la lecture pour les mesures entre 5 SCCM à 10 SLPM, ±0.3% de la lecture pour les mesures entre 10 SLPM à 30 SLPM, ±0.2% de la lecture pour les mesures entre 30 SLPM à 3000 SLPM, ±0.3% de la lecture pour les mesures supérieures à 3000 SLPM jusqu'à 6000 SLPM et ±0.5% pour les mesures inférieures à 5 SCCM jusqu'à concurrence de 1 SCCM, équivalent air ou azote. Les incertitudes exprimées sont élargies avec un facteur d'élargissement k = 2, et ce, pour un niveau de confiance d'environ 95 %, dans l'hypothèse d'une distribution normale incluant la résolution de l'instrument. Le rapport d'incertitude des essais (RIE) de cet étalonnage respecte un ratio de 4:1 à moins d'indication contraire.

SOMMAIRE DES CONDITIONS DE L'INSTRUMENT EN TEST

Conditions initiales	En bon état
Travail Effectué	Étalonnage de l'instrument
Résultats	Lectures initiales dans/hors tolérances-conditionnel
	Lectures finales dans les tolérances avec un K facteur de 0.98
Remarques	Fréquence d'étalonnage aux 12 mois

B Poirier

Bernard Poirier
Métrologiste

Responsable du laboratoire

2021.01.12

POLYCONTROLS
INTEGRATION • CALIBRATION • INSTRUMENTATION

CLAS NRC-CNRC CLAS 2009-02

SCC Accredited LAB #655

Certificat d'étalonnage # 13439

Numéro de série:	23544	Station de mesure:	3
Date d'étalonnage:	2020-12-22	Procédure:	POS-CAL-005
Identification de l'instrument:	EM-178	Règle de décision:	Méthode #3

Instrument de mesure de référence utilisé pour l'étalonnage initial

Description	Modèle	# Série	Traçabilité	Date dû
Fluke molbloc_30 slpm	3E4-VCR-V-Q	2403	1500285594	2021-06-10
Fluke molbox1	Molbox1	755	1500285062	2021-06-09
RTD Mist	M22	2208102	2020003043	2021-04-23
Module 44.5 PSI avec Baro 163671	Module 30	160659	2020003156	2021-04-28

Spécifications initiales de l'appareil		Condition d'étalonnage	
Gaz	Air	Gaz	Air
Température d'opération		Température ambiante	20.5 °C
Pression à l'entrée		Pression ambiante	1001.8 mbar
Pression à la sortie		Orientation	Horizontale
Température de référence		Élastomère	Viton
Pression de référence		Valve	
Étendue d'échelle	10-2000 ALH		
Signaux Entrée/Sortie	-		
Alimentation			
Tolérance ±2 %O.R.			

Lectures initiales

Débit du test ALH	Instrument en test L	Valeurs mesurées Pression PSIA	Valeurs mesurées Température °C	Valeurs mesurées Référence L	Référence calculée L	Erreur calculée L	Tolérance acceptable L	Incertitude k = 2 L	TUR
409.8377	69.1750	14.5381	20.38	67.7339	68.2997	0.8753	1.3660	0.2264	>4
706.3275	119.7100	14.5430	20.40	116.6794	117.6206	2.0894	2.3524	0.3898	>4
1573.6968	266.9000	14.5563	20.40	259.8304	261.6944	5.2056	5.2339	0.8674	>4

POLYCONTROLS
INTEGRATION • CALIBRATION • INSTRUMENTATION

CLAS NRC-CNRC CLAS 2009-02

SCC Accredited LAB #655

Certificat d'étalonnage # 13439

Numéro de série:	23544	Station de mesure:	3
Date d'étalonnage:	2020-12-22	Procédure:	POS-CAL-005
Identification de l'instrument:	EM-178	Règle de décision:	Méthode #3

Résultats initiaux

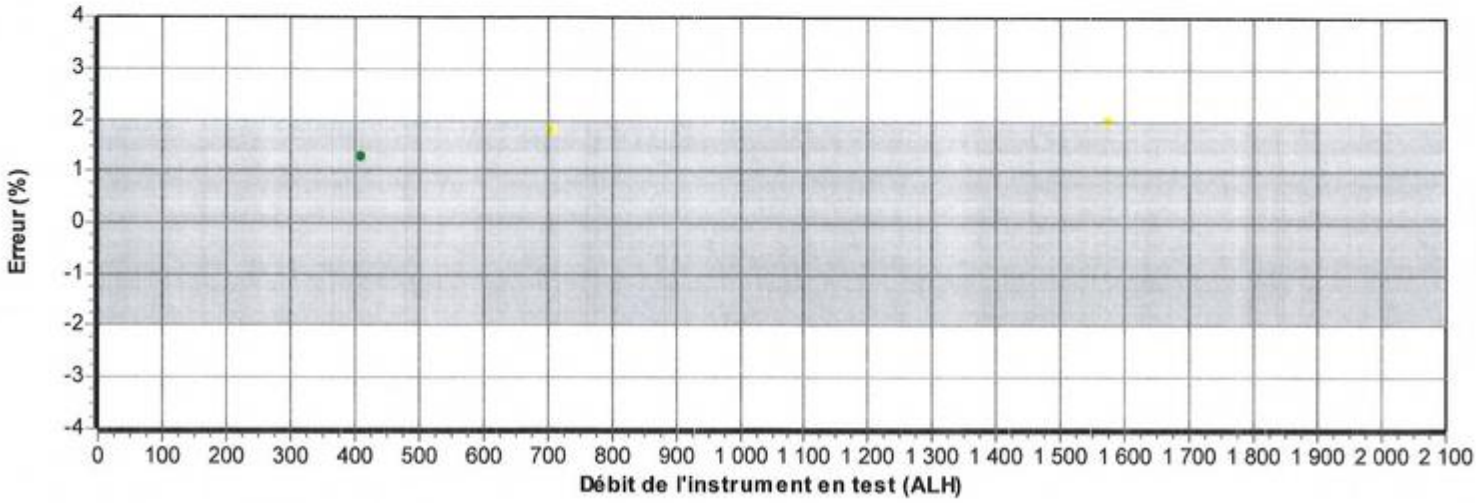

Voir l'annexe pour la règle de décision

POLYCONTROLS
INTEGRATION • CALIBRATION • INSTRUMENTATION

CLAS NRC·CNRC CLAS 2009-02

SCC Accredited LAB #655

Certificat d'étalonnage # 13439

Numéro de série:	23544	Station de mesure:	3
Date d'étalonnage:	2020-12-22	Procédure:	POS-CAL-005
Identification de l'instrument:	EM-178	Règle de décision:	Méthode #3

Instrument de mesure de référence utilisé pour l'étalonnage final

Description	Modèle	# Série	Traçabilité	Date dû
Fluke molbloc_30 slpm	3E4-VCR-V-Q	2403	1500285594	2021-06-10
Fluke molbox1	Molbox1	755	1500285062	2021-06-09
RTD Mist	M22	2208102	2020003043	2021-04-23
Module 44.5 PSI avec Baro 163671	Module 30	160659	2020003156	2021-04-28

Spécifications finales de l'appareil		Condition d'étalonnage	
Gaz	Air	Gaz	Air
Température d'opération		Température ambiante	21 °C
Pression à l'entrée		Pression ambiante	1002.18 mbar
Pression à la sortie		Orientation	Horizontale
Température de référence		Élastomère	Viton
Pression de référence		Valve	
Étendue d'échelle	10-2000 ALH		
Signaux Entrée/Sortie	-		
Alimentation			
Tolérance ±2 %O.R.			

Lectures finales

Débit du test ALH	Instrument en test L	Valeurs mesurées Pression PSIA	Température °C	Référence L	Référence calculée L	Erreur calculée L	Tolérance acceptable L	Incertitude k = 2 L	TUR
403.8407	66.8703	14.5466	21.01	66.5447	67	-0.3356	1.3441	0	>4
696.9086	115.8066	14.5496	20.81	115.0861	116	-0.3173	2.3225	0	>4
1573.7245	261.4440	14.5575	20.48	260.0681	262	-0.5338	5.2396	1	>4

Fc: 1.0019396

2021.01.21

POLYCONTROLS
INTEGRATION • CALIBRATION • INSTRUMENTATION

CLAS NRC·CNRC CLAS 2009-02

SCC Accredited LAB Accredited CCN #655

Certificat d'étalonnage # 13439

Numéro de série:	23544	Station de mesure:	3
Date d'étalonnage:	2020-12-22	Procédure:	POS-CAL-005
Identification de l'instrument:	EM-178	Règle de décision:	Méthode #3

Résultats finaux

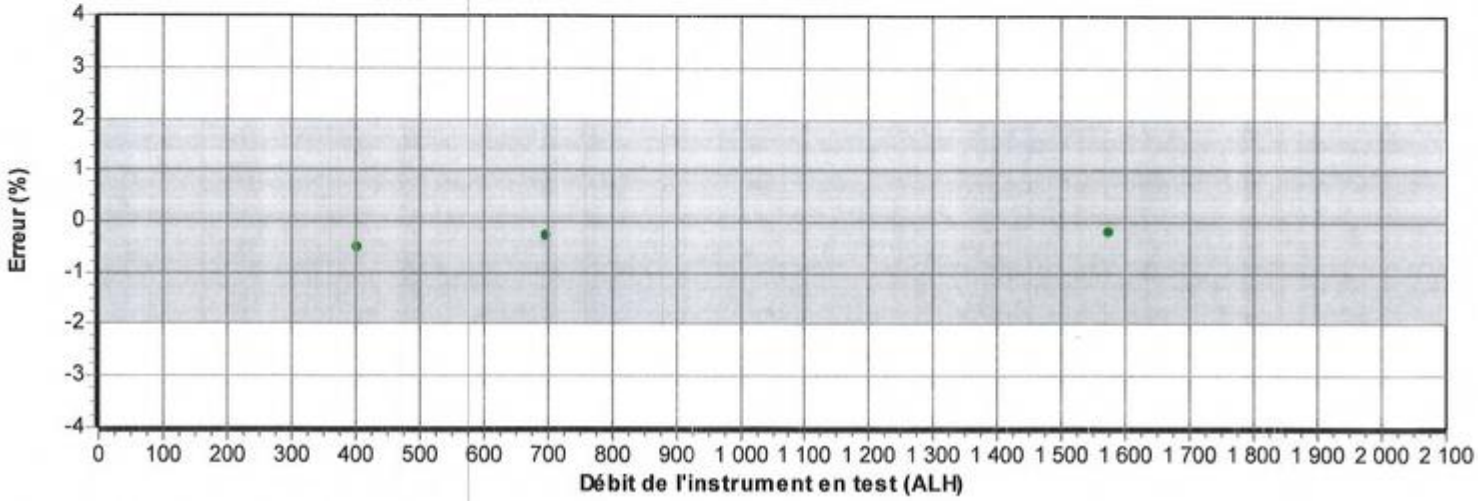

Voir l'annexe pour la règle de décision

2021.01.12

Annexe pour la règle de décision

Méthode 3 Statut de Conformité Non-binaire avec Bande de Garde en considérant l'incertitude de la mesure directement

Cette méthode tient compte d'une bande de garde pour définir l'intervalle acceptable et de rejet. La limite acceptable du résultat de la mesure est calculée selon la méthode mathématique suivante AL = TL – w et de rejet RL = TL + w, dont w = rU. Le multiple r de l'incertitude combiné élargie U peut être défini selon la table 1 section 5.2 du document ILAC G8 : 2019. L'incertitude de la mesure U est une incertitude combinée élargie ayant un niveau de confiance de 95% (k = 2). La règle de conformité non-binaire avec bande de garde est définie lorsqu'il y a quatre choix sur le statut de l'essai : dans la tolérance, acceptation conditionnelle, rejet conditionnel, et hors tolérance.

Les conformités de l'essai sont définies telles que :

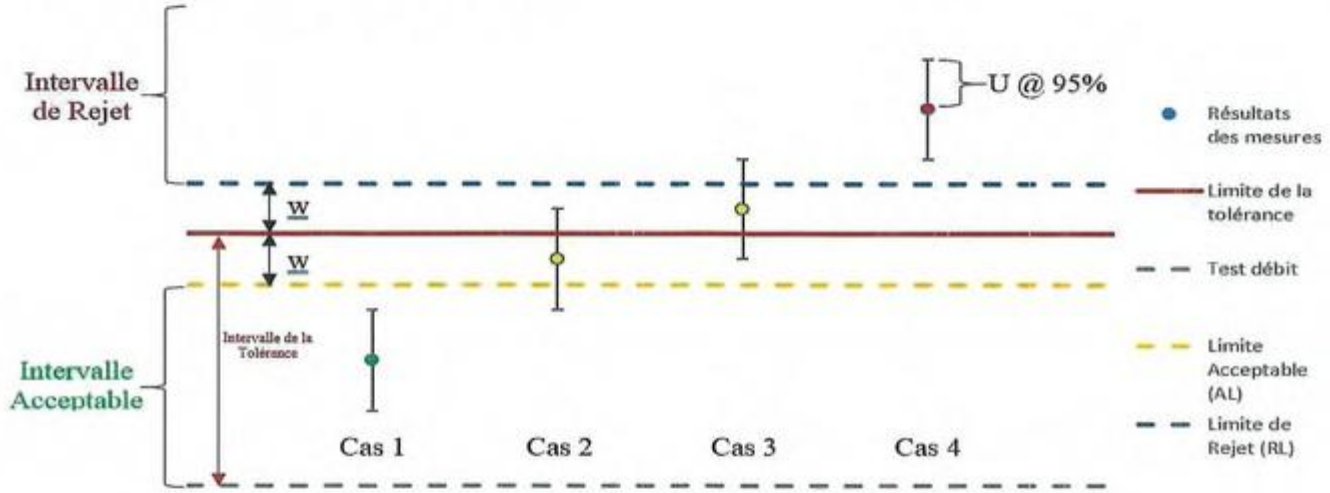

Explication de la règle Non-Binaire avec Bande de Garde

Cas 1** – Inférieur à la limite acceptable AL, **Statut : Dans les tolérances (In tolerance).

- Le résultat de la mesure est à l'intérieur de l'intervalle acceptable. Cependant, l'estimation du risque en assumant la probabilité d'une distribution normale d'être à l'extérieur de la limite de la tolérance est < 2.5%. L'incertitude de l'essai est directement prise en considération. Couleur verte.

Cas 2** – Inférieur à la limite de la tolérance TL, supérieur à la limite acceptable AL, **Statut : Dans les tolérances-Conditionnel.

- Le résultat de la mesure est à l'extérieur de l'intervalle acceptable mais inférieur à la limite de la tolérance. Cependant, la valeur observée est située dans la bande de garde w = TL-AL et le statut du résultat est conditionnel à l'évaluation du risque du client. L'incertitude de la mesure est directement prise en considération. Couleur jaune.

Cas 3** – Supérieur à la limite de la tolérance, inférieur à RL, **Statut : Hors tolérance-Conditionnel.

- Le résultat de la mesure est supérieur à la limite de la tolérance mais à l'extérieur de l'intervalle de rejet. Cependant, la valeur observée est située dans la bande de garde w = TL-RL et le statut du résultat est conditionnel à l'évaluation du risque du client. L'incertitude de la mesure est directement prise en considération. Couleur jaune.

Cas 4** – Supérieur à la limite de rejet RL, **Statut : Hors-tolérance (Out of tolerance).

- Le résultat de la mesure est à l'intérieur de l'intervalle de rejet. L'incertitude de l'essai est directement prise en considération. Couleur rouge.

POLYCONTROLS
INTEGRATION • CALIBRATION • INSTRUMENTATION

CLAS NRC-CNRC CLAS 2009-02

SCC Accredited LAB #655

CERTIFICAT D'ÉTALONNAGE # 13438

Date d'étalonnage : 2020-12-22
Date d'émission du certificat : 2020-12-23

Services Polytests
695 B Gaudette street
St-Jean-sur-Richelieu, Québec, Canada
J3B 7S7

Étalonnage d'un
Shinigawa DCDa-2c S/N : 23543

CONFORMITÉ AU PROGRAMME DE QUALITÉ

Tous les étalonnages sont effectués conformément au manuel d'assurance qualité de Polycontrols qui est conforme à la norme ISO/IEC 17025: 2017, à la norme ISO 9001 – 2015 ainsi qu'à toutes autres exigences de qualité définies dans la description d'achat des clients. Les résultats ne sont valides que pour l'objet soumis à l'essai ou à l'étalonnage. Si applicable, la règle de décision est décrite au certificat.

TRAÇABILITÉ

La traçabilité des étalons de débit au National Institute of Standards and Technology, NIST, est maintenue par les laboratoires de Fluke Corporation de Phoenix, Arizona et est conforme aux normes ISO/IEC 17025, ANSI/NCSL Z540-1-1994, ISO-10012-1, MIL-STD 45662A.

Le Service d'évaluation des laboratoires d'étalonnage (CLAS) du Conseil national de recherches du Canada (CNRC) a évalué et certifié la capacité d'étalonnage du laboratoire et la traçabilité au Système international d'unités (SI) ou à des étalons acceptables selon le CLAS. Le présent certificat d'étalonnage est délivré conformément aux conditions de certification du CLAS et aux conditions d'accréditation du Conseil canadien des normes (CCN). Le CLAS et le CCN ne garantissent pas l'exactitude des étalonnages individuels effectués par les laboratoires accrédités.

APTITUDE EN MATIÈRE DE MESURE ET D'ÉTALONNAGE - CMC

Les rendements métrologiques d'étalonnage ont une incertitude de ±0.2% de la lecture pour les mesures entre 5 SCCM à 10 SLPM, ±0.3% de la lecture pour les mesures entre 10 SLPM à 30 SLPM, ±0.2% de la lecture pour les mesures entre 30 SLPM à 3000 SLPM, ±0.3% de la lecture pour les mesures supérieures à 3000 SLPM jusqu'à 6000 SLPM et ±0.5% pour les mesures inférieures à 5 SCCM jusqu'à concurrence de 1 SCCM, équivalent air ou azote. Les incertitudes exprimées sont élargies avec un facteur d'élargissement k = 2, et ce, pour un niveau de confiance d'environ 95 %, dans l'hypothèse d'une distribution normale incluant la résolution de l'instrument. Le rapport d'incertitude des essais (RIE) de cet étalonnage respecte un ratio de 4:1 à moins d'indication contraire.

SOMMAIRE DES CONDITIONS DE L'INSTRUMENT EN TEST

Conditions initiales	En bon état
Travail Effectué	Étalonnage de l'instrument
	Lectures Initiales = Lectures finales, aucun ajustement
Résultats	Lectures finales dans les tolérances
Remarques	Fréquence d'étalonnage aux 12 mois

Bernard Poirier
Métrologiste

Responsable du laboratoire

2021. 01. 12

POLYCONTROLS
INTEGRATION • CALIBRATION • INSTRUMENTATION

CLAS NRC-CNRC CLAS 2009-02

SCC Accredited LAB #655

Certificat d'étalonnage # 13438

Numéro de série:	23543	Station de mesure:	3
Date d'étalonnage:	2020-12-22	Procédure:	POS-CAL-005
Identification de l'instrument:	EM-179	Règle de décision:	Méthode #3

Instrument de mesure de référence utilisé pour l'étalonnage final

Description	Modèle	# Série	Traçabilité	Date dû
Fluke molbloc_30 slpm	3E4-VCR-V-Q	2403	1500285594	2021-06-10
Fluke molbox1	Molbox1	755	1500285062	2021-06-09
RTD Mist	M22	2208102	2020003043	2021-04-23
Module 44.5 PSI avec Baro 163671	Module 30	160659	2020003156	2021-04-28

Spécifications finales de l'appareil		Condition d'étalonnage	
Gaz	Air	Gaz	Air
Température d'opération		Température ambiante	20.5 °C
Pression à l'entrée		Pression ambiante	1001.04 mbar
Pression à la sortie		Orientation	Horizontale
Température de référence		Élastomère	Viton
Pression de référence		Valve	
Étendue d'échelle	10-2000 ALH		
Signaux Entrée/Sortie	-		
Alimentation			
Tolérance ±2 %O.R.			

Lectures finales

Débit du test ALH	Instrument en test L	Valeurs mesurées Pression PSIA	Valeurs mesurées Température °C	Valeurs mesurées Référence L	Référence calculée L	Erreur calculée L	Tolérance acceptable L	Incertitude k = 2 L	TUR
406.2081	68.3650	14.5370	20.32	67.0974	67.6478	0.7172	1.3530	0.2242	>4
735.9483	124.0750	14.5375	20.26	121.7199	122.6911	1.3839	2.4538	0.4066	>4
1572.2745	264.2100	14.5401	20.55	259.4897	261.7685	2.4415	5.2354	0.8678	>4

Fc: 0,98995

2021. 01. 12

POLYCONTROLS
INTEGRATION • CALIBRATION • INSTRUMENTATION

CLAS NRC·CNRC CLAS 2009-02

SCC Accredited LAB #655

Certificat d'étalonnage # 13438

Numéro de série:	23543	Station de mesure:	3
Date d'étalonnage:	2020-12-22	Procédure:	POS-CAL-005
Identification de l'instrument:	EM-179	Règle de décision:	Méthode #3

Résultats finaux

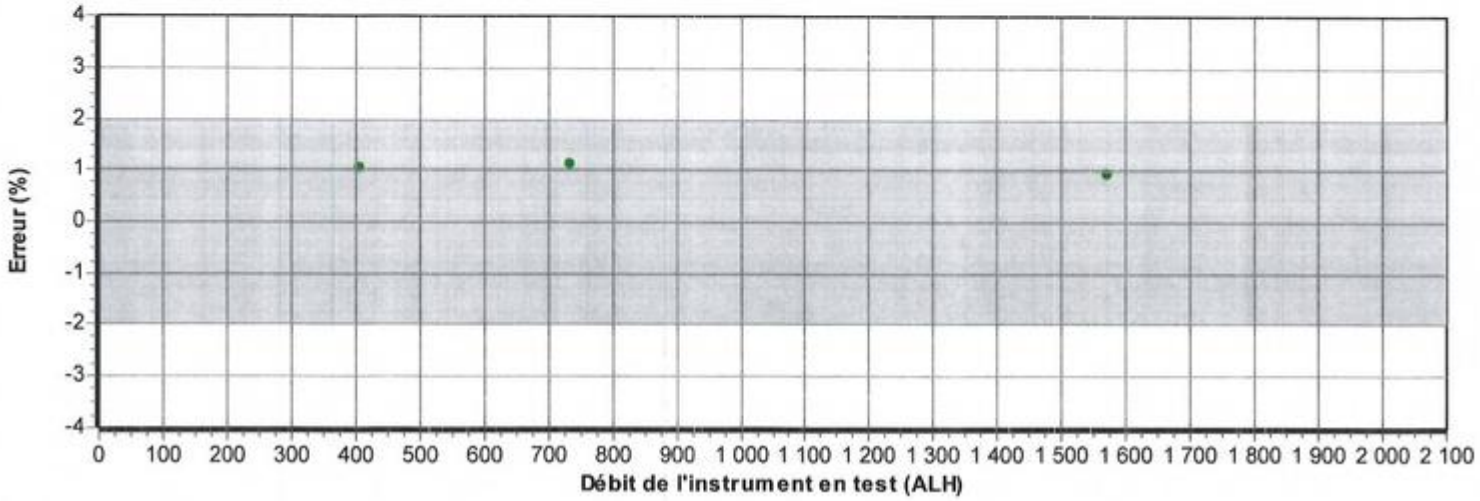

Voir l'annexe pour la règle de décision

2021-07-12

Annexe pour la règle de décision

Méthode 3 Statut de Conformité Non-binaire avec Bande de Garde en considérant l'incertitude de la mesure directement

Cette méthode tient compte d'une bande de garde pour définir l'intervalle acceptable et de rejet. La limite acceptable du résultat de la mesure est calculée selon la méthode mathématique suivante AL = TL – w et de rejet RL = TL + w, dont w = rU. Le multiple r de l'incertitude combiné élargie U peut être défini selon la table 1 section 5.2 du document ILAC G8 : 2019. L'incertitude de la mesure U est une incertitude combinée élargie ayant un niveau de confiance de 95% (k = 2). La règle de conformité non-binaire avec bande de garde est définie lorsqu'il y a quatre choix sur le statut de l'essai : dans la tolérance, acceptation conditionnelle, rejet conditionnel, et hors tolérance.

Les conformités de l'essai sont définies telles que :

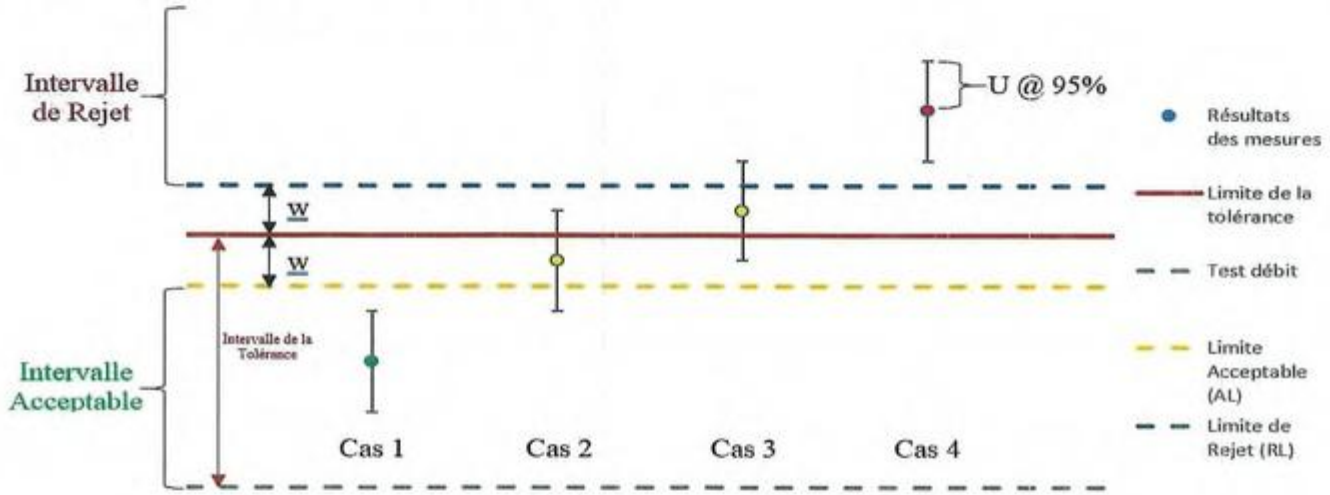

Explication de la règle Non-Binaire avec Bande de Garde

Cas 1** – Inférieur à la limite acceptable AL, **Statut : Dans les tolérances (In tolerance).

- Le résultat de la mesure est à l'intérieur de l'intervalle acceptable. Cependant, l'estimation du risque en assumant la probabilité d'une distribution normale d'être à l'extérieur de la limite de la tolérance est < 2.5%. L'incertitude de l'essai est directement prise en considération. Couleur verte.

Cas 2** – Inférieur à la limite de la tolérance TL, supérieur à la limite acceptable AL, **Statut : Dans les tolérances-Conditionnel.

- Le résultat de la mesure est à l'extérieur de l'intervalle acceptable mais inférieur à la limite de la tolérance. Cependant, la valeur observée est située dans la bande de garde w = TL-AL et le statut du résultat est conditionnel à l'évaluation du risque du client. L'incertitude de la mesure est directement prise en considération. Couleur jaune.

Cas 3** – Supérieur à la limite de la tolérance, inférieur à RL, **Statut : Hors tolérance-Conditionnel.

- Le résultat de la mesure est supérieur à la limite de la tolérance mais à l'extérieur de l'intervalle de rejet. Cependant, la valeur observée est située dans la bande de garde w = TL-RL et le statut du résultat est conditionnel à l'évaluation du risque du client. L'incertitude de la mesure est directement prise en considération. Couleur jaune.

Cas 4** – Supérieur à la limite de rejet RL, **Statut : Hors-tolérance (Out of tolerance).

- Le résultat de la mesure est à l'intérieur de l'intervalle de rejet. L'incertitude de l'essai est directement prise en considération. Couleur rouge.

Instrumentation Saint•Laurent inc.
Accrédité ISO 17025

CLAS NRC·CNRC CLAS 2010-02

SCC Accredited LAB Accrédité CCN N°669

80 rue de la montagne
St-Joseph du lac
(Québec), J0N 1M0
Tél: (450) 473-6169
Fax: (450) 473-5207
Email: inst.st-laurent@videotron.ca

CERTIFICAT D'ÉTALONNAGE

No.Certificat: CE-EM-015 09/03/20

CLIENT	
Compagnie:	Services Polytests Inc
Adresse:	695 B rue Gaudette
	St-Jean-sur-Richelieu, Québec, J3B 7S7

SPÉCIFICATION DE CALIBRATION	
Procédure de service:	4IN9101
Précision requise:	+\- 2°C
Fréquence d'étalonnage: (jours)	365

SPÉCIFICATION DE L'INSTRUMENT			
Type d'instrument:	Enregistreur	**Type d'entrée:**	Temp
Manufacturier:	Keithley	**Type de sortie:**	Digitale
No. Model:	7700	**Type de mesure:**	Température
No. Série:	1213648	**Gamme:**	Divers
Emplacement:	N/A	**No. Machine:**	N.A.

SPÉCIFICATION DE L'ÉTALON			
Étalon Utilisé:	Fluke 744	**No. du certificat d'étalonnage:**	2019007064
No. Série:	8139009	**Dernière date d'étalonnage:**	18-Oct-19
Certificat fait par:	Alpha Controls	**Prochaine date d'étalonnage:**	18-Oct-20
Commentaire:			

RÉSULTAT D'ÉTALONNAGE

Entrée Source	Valeur Donnée	Valeur Actuelle	Erreur de Déviation	Valeur après Étalonnage	Incertitude Élargie	Commentaire
-190.0 °C	-190.0 °C	-189.2 °C	0.8 °C	-189.2 °C	1.0 °C	Input#1TypeK
0.0 °C	0.0 °C	0.0 °C	0.0 °C	0.0 °C	1.0 °C	Input#1TypeK
750.0 °C	750.0 °C	749.9 °C	-0.1 °C	749.9 °C	1.0 °C	Input#1TypeK
100.0 °C	100.0 °C	100.1 °C	+0.1 °C	100.1 °C	1.0 °C	Input#2 TypeK
100.0 °C	100.0 °C	100.6 °C	+0.6 °C	100.6 °C	1.0 °C	Input#3 TypeK
100.0 °C	100.0 °C	101.0 °C	+1.0 °C	101.0 °C	1.0 °C	Input#4 TypeK
100.0 °C	100.0 °C	101.5 °C	+1.5 °C	101.5 °C	1.0 °C	Input#5TypeK
100.0 °C	100.0 °C	101.5 °C	+1.5 °C	101.5 °C	1.0 °C	Input#6TypeK
100.0 °C	100.0 °C	101.8 °C	+1.8 °C	101.8 °C	1.0 °C	Input#7TypeK
100.0 °C	100.0 °C	101.5 °C	+1.5 °C	101.5 °C	1.0 °C	Input#8TypeK
100.0 °C	100.0 °C	101.5 °C	+1.5 °C	101.5 °C	1.0 °C	Input#9TypeK
100.0 °C	100.0 °C	101.2 °C	+1.2 °C	101.2 °C	1.0 °C	Input#10TypeJ
100.0 °C	100.0 °C	101.0 °C	+1.0 °C	101.0 °C	1.0 °C	Input#11TypeJ
100.0 °C	100.0 °C	100.8 °C	+0.8 °C	100.8 °C	1.0 °C	Input#12TypeJ
100.0 °C	100.0 °C	100.7 °C	+0.7 °C	100.7 °C	1.0 °C	Input#13 TypeJ
100.0 °C	100.0 °C	100.6 °C	+0.6 °C	100.6 °C	1.0 °C	Input#14TypeJ
100.0 °C	100.0 °C	100.5 °C	+0.5 °C	100.5 °C	1.0 °C	Input#15 TypeJ
100.0 °C	100.0 °C	100.3 °C	+0.3 °C	100.3 °C	1.0 °C	Input#16TypeJ
100.0 °C	100.0 °C	100.4 °C	+0.4 °C	100.4 °C	1.0 °C	Input#17TypeJ
100.0 °C	100.0 °C	100.3 °C	+0.3 °C	100.3 °C	1.0 °C	Input#18TypeJ
100.0 °C	100.0 °C	100.4 °C	+0.4 °C	100.4 °C	1.0 °C	Input#19TypeJ
100.0 °C	100.0 °C	100.3 °C	+0.3 °C	100.3 °C	1.0 °C	Input#20TypeJ
12.000 mA	12.000 mA	12.000 mA	0.000 mA	12.000 mA	1.00 mA	Input#21
12.000 mA	12.000 mA	12.000 mA	0.000 mA	12.000 mA	1.00 mA	Input#22

Conditions Environnementales: Température: 20 °C Humidité: 23 %RH

5F09101

Instrumentation Saint•Laurent inc.
Accrédité ISO 17025

CLAS NRC·CNRC
CLAS 2010-02

SCC Accredited LAB
LAB Accrédité CCN
N°669

80 rue de la montagne
St-Joseph du lac
(Québec), J0N 1M0
Tél: (450) 473-6169
Fax: (450) 473-5207
Email: inst.st-laurent@videotron.ca

CERTIFICAT D'ÉTALONNAGE

No.Certificat: CE-EM-015 09/03/20

CLIENT	
Compagnie:	Services Polytests Inc
Adresse:	695 B rue Gaudette
	St-Jean-sur-Richelieu, Québec, J3B 7S7

SPÉCIFICATION DE CALIBRATION	
Procédure de service:	4IN9101
Précision requise:	+\- 2°C
Fréquence d'étalonnage: (jours)	365

SPÉCIFICATION DE L'INSTRUMENT			
Type d'instrument:	Enregistreur	**Type d'entrée:**	Temp
Manufacturier:	Keithley	**Type de sortie:**	Digitale
No. Model:	7700	**Type de mesure:**	Température
No. Série:	1213648	**Gamme:**	Divers
Emplacement:	N/A	**No. Machine:**	N.A.
Type d'Étalonnage:	Test avec EM-147		

Instrumentation St-Laurent Inc. Certifie que l'instrument ci-haut, rencontre ou excède les spécifications établies par le fabriquant. Le système qualité de l'entreprise est conforme aux exigences de la norme ISO 17025 et les étalons utilisés pour effectuer l'étalonnage est retraçable au CNRC et/ou au NIST. Le degré d'incertitude est basé sur un niveau de confiance=95%, K=2.

DATE D'ÉTALONNAGE / ÉMISSION DU CERTIFICAT	
Date d'Étalonnage:	9 Mars 2020
Date du prochain Étalonnage:	9 Mars 2021
Date d'émission du certificat:	9 Mars 2020

CONFORMITÉ D'ÉTALONNAGE	Avant	Après
Conforme:	X	X
Non Conforme:		

Le Service d'évaluation des laboratoires d'étalonnage (CLAS) du Conseil national de recherches du Canada (CNRC) a évalué et certifié la capacité d'étalonnage du laboratoire et la traçabilité au Système international d'unités (SI) ou à des étalons acceptables selon le CLAS. Le présent certificat d'étalonnage est délivré conformément aux conditions de certification du CLAS et aux conditions d'accréditation du Conseil canadien des normes (CCN). Numéro d'accréditation du CCN: # 669. Le CLAS et le CCN ne garantissent pas l'exactitude des étalonnages individuels effectués par les laboratoires accrédités.

Martin Langlais - Technicien

2020. MARS 30

Instrumentation Saint•Laurent inc.
Accrédité ISO 17025

CLAS NRC·CNRC CLAS 2010-02

SCC Accredited LAB Accrédité CCN N°669

80 rue de la montagne
St-Joseph du lac
(Québec), J0N 1M0
Tél: (450) 473-6169
Fax: (450) 473-5207
Email: inst.st-laurent@videotron.ca

CERTIFICAT D'ÉTALONNAGE

No.Certificat: CE-EM-154 09/03/20

CLIENT	
Compagnie:	Services Polytests Inc
Adresse:	695 B rue Gaudette
	St-Jean-sur-Richelieu, Québec, J3B 7S7

SPÉCIFICATION DE CALIBRATION	
Procédure de service:	4IN9101
Précision requise:	+\- 2°C
Fréquence d'étalonnage: (jours)	365

SPÉCIFICATION DE L'INSTRUMENT			
Type d'instrument:	Enregistreur	**Type d'entrée:**	Temp
Manufacturier:	Keithley	**Type de sortie:**	Digitale
No. Model:	7700	**Type de mesure:**	Température
No. Série:	1306774	**Gamme:**	Divers
Emplacement:	N/A	**No. Machine:**	N.A.

SPÉCIFICATION DE L'ÉTALON			
Étalon Utilisé:	Fluke 744	**No. du certificat d'étalonnage:**	2019007064
No. Série:	8139009	**Dernière date d'étalonnage:**	18-Oct-19
Certificat fait par:	Alpha Controls	**Prochaine date d'étalonnage:**	18-Oct-20
Commentaire:			

RÉSULTAT D'ÉTALONNAGE

Entrée Source	Valeur Donnée	Valeur Actuelle	Erreur de Déviation	Valeur après Étalonnage	Incertitude Élargie	Commentaire
-17.000 mV	-17.000 mV	-17.016 mV	-0.016 mV	-17.016 mV	0.1 mV	Input#1
0.000 mV	0.000 mV	0.037 mV	+0.037 mV	0.037 mV	0.1 mV	Input#1
20.000 mV	20.000 mV	19.940 mV	-0.060 mV	19.940 mV	0.1 mV	Input#1
30.000 mV	30.000 mV	29.931 mV	-0.069 mV	29.931 mV	0.1 mV	Input#2
Input#3 Non-Conforme						
5.000 V.DC.	5.000 V.DC.	4.999 V.DC.	-0.001 V.DC.	4.999 V.DC.	0.1 V.DC.	Input#4
30.000 mV	30.000 mV	29.990 mV	-0.010 mV	29.990 mV	0.1 mV	Input#5
30.000 mV	30.000 mV	29.991 mV	+0.009 mV	29.991 mV	0.1 mV	Input#6
100.00 Ohms	100.00 Ohms	99.98 Ohms	-0.02 Ohms	99.98 Ohms	1.0 Ohms	Input#7
100.00 Ohms	100.00 Ohms	99.99 Ohms	-0.01 Ohms	99.99 Ohms	1.0 Ohms	Input#8
100.00 Ohms	100.00 Ohms	99.99 Ohms	-0.01 Ohms	99.99 Ohms	1.0 Ohms	Input#9
100.00 Ohms	100.00 Ohms	99.99 Ohms	-0.01 Ohms	99.99 Ohms	1.0 Ohms	Input#10
100.0 °C	100.0 °C	100.5 °C	+0.5 °C	100.5 °C	1.0 °C	Input#11TypeT
100.0 °C	100.0 °C	100.4 °C	+0.4 °C	100.4 °C	1.0 °C	Input#12TypeT
100.0 °C	100.0 °C	100.0 °C	0.0 °C	100.0 °C	1.0 °C	Input#13 TypeJ
100.0 °C	100.0 °C	100.2 °C	+0.2 °C	100.2 °C	1.0 °C	Input#14TypeJ
100.0 °C	100.0 °C	100.4 °C	+0.4 °C	100.4 °C	1.0 °C	Input#15 TypeJ
100.0 °C	100.0 °C	100.0 °C	0.0 °C	100.0 °C	1.0 °C	Input#16TypeJ
100.00 Ohms	100.00 Ohms	99.99 Ohms	-0.01 Ohms	99.99 Ohms	1.0 Ohms	Input#17
100.00 Ohms	100.00 Ohms	100.01 Ohms	+0.01 Ohms	100.01 Ohms	1.0 Ohms	Input#18
100.00 Ohms	100.00 Ohms	100.02 Ohms	+0.02 Ohms	100.02 Ohms	1.0 Ohms	Input#19
100.00 Ohms	100.00 Ohms	100.01 Ohms	+0.01 Ohms	100.01 Ohms	1.0 Ohms	Input#20
12.000 mA	12.000 mA	12.000 mA	0.000 mA	12.000 mA	1.00 mA	Input#21
12.000 mA	12.000 mA	12.000 mA	0.000 mA	12.000 mA	1.00 mA	Input#22

Conditions Environnementales: Température: 20 °C Humidité: 23 %RH

5F09101

Instrumentation Saint•Laurent Inc.
Accrédité ISO 17025

CLAS NRC·CNRC
CLAS 2010-02

SCC Accredited LAB
LAB Accrédité CCN
N°669

80 rue de la montagne
St-Joseph du lac
(Québec), J0N 1M0
Tél: (450) 473-6169
Fax: (450) 473-5207
Email: inst.st-laurent@videotron.ca

CERTIFICAT D'ÉTALONNAGE

No.Certificat: CE-EM-154 09/03/20

CLIENT	
Compagnie:	Services Polytests Inc
Adresse:	695 B rue Gaudette
	St-Jean-sur-Richelieu, Québec, J3B 7S7

SPÉCIFICATION DE CALIBRATION	
Procédure de service:	4IN9101
Précision requise:	+\- 2°C
Fréquence d'étalonnage: (jours)	365

SPÉCIFICATION DE L'INSTRUMENT			
Type d'instrument:	Enregistreur	**Type d'entrée:**	Temp
Manufacturier:	Keithley	**Type de sortie:**	Digitale
No. Model:	7700	**Type de mesure:**	Température
No. Série:	1306774	**Gamme:**	Divers
Emplacement:	N/A	**No. Machine:**	N.A.
Type d'Étalonnage:	Test avec EM-147		

Instrumentation St-Laurent Inc. Certifie que l'instrument ci-haut, rencontre ou excède les spécifications établies par le fabriquant. Le système qualité de l'entreprise est conforme aux exigences de la norme ISO 17025 et les étalons utilisés pour effectuer l'étalonnage est retraçable au CNRC et/ou au NIST. Le degré d'incertitude est basé sur un niveau de confiance=95%, K=2.

DATE D'ÉTALONNAGE / ÉMISSION DU CERTIFICAT	
Date d'Étalonnage:	9 Mars 2020
Date du prochain Étalonnage:	9 Mars 2021
Date d'émission du certificat:	9 Mars 2020

CONFORMITÉ D'ÉTALONNAGE		
	Avant	**Après**
Conforme:	X	X
Non Conforme:		

Le Service d'évaluation des laboratoires d'étalonnage (CLAS) du Conseil national de recherches du Canada (CNRC) a évalué et certifié la capacité d'étalonnage du laboratoire et la traçabilité au Système international d'unités (SI) ou à des étalons acceptables selon le CLAS. Le présent certificat d'étalonnage est délivré conformément aux conditions de certification du CLAS et aux conditions d'accréditation du Conseil canadien des normes (CCN). Numéro d'accréditation du CCN: # 669. Le CLAS et le CCN ne garantissent pas l'exactitude des étalonnages individuels effectués par les laboratoires accrédités.

Martin Langlais - Technicien

2020 - MARS 30

Calibration complies with ISO/IEC 17025, ANSI/NCSL Z540-1, and 9001

Cert. No.: 4199-11842976

Traceable® Certificate of Calibration for Dial Barometer

Manufactured for and distributed by: Traceable Product 12554 Galveston Rd B230, Webster, TX 77598

Instrument Identification:

Model: 4199 S/N: 192343395 Manufacturer: Control Company

Standards/Equipment:

Description	Serial Number	Due Date	NIST Traceable Reference
Digital Barometer	D4540001	22 Oct 2020	1000461276

Certificate Information:

Technician: 57 Procedure: CAL-33 Cal Date: 6 Oct 2020 Due Date: 6 Oct 2022

Test Conditions: 62.4 %RH 23.62°C 1015 mBar

Calibration Data: EM-304

Unit(s)	Nominal	As Found	In Tol	Nominal	As Left	In Tol	Min	Max	±U	TUR
mb/hPa	961.17	961	Y	961.30	961	Y	956	966	0.62	>4:1
mb/hPa	982.32	982	Y	982.10	982	Y	977	987	0.62	>4:1
mb/hPa	1,012.31	1,012	Y	1,012.22	1,012	Y	1,007	1,017	0.62	>4:1

This certificate indicates Traceability to standards provided by (NIST) National Institute of Standards and Technology and/or a National Standards Laboratory.

A Test Uncertainty Ratio of at least 4:1 is maintained unless otherwise stated and is calculated using the expanded measurement uncertainty. Uncertainty evaluation includes the instrument under test and is calculated in accordance with the ISO "Guide to the Expression of Uncertainty in Measurement" (GUM). The uncertainty represents an expanded uncertainty using a coverage factor k=2 to approximate a 95% confidence level. In tolerance conditions are based on test results falling within specified limits with no reduction by the uncertainty of the measurement. The results contained herein relate only to the item calibrated. This certificate shall not be reproduced except in full, without written approval of Control Company.

Nominal=Standard's Reading; As Left=Instrument's Reading; In Tol=In Tolerance; Min/Max=Acceptance Range; ±U=Expanded Measurement Uncertainty; TUR=Test Uncertainty Ratio; Accuracy=±(Max-Min)/2; Min = As Left Nominal (Rounded) - Tolerance; Max = As Left Nominal (Rounded) + Tolerance; Date=MM/DD/YY

Nicol Rodriguez, Quality Manager

Aaron Judice, Technical Manager

Note:

Maintaining Accuracy:

In our opinion once calibrated your Dial Barometer should maintain its accuracy. There is no exact way to determine how long calibration will be maintained. Dial Barometers change little, if any at all, but can be affected by aging, temperature, shock, and contamination.

Recalibration:

For factory calibration and re-certification traceable to National Institute of Standards and Technology contact Control Company.

CONTROL COMPANY 12554 Galveston RD Suite B230 Webster TX USA 77598
Phone 281 482-1714 Fax 281 482-9448 service@contro13.com www.control3.com

Trescal
| CALIBRATION SOLUTIONS TO IMPROVE YOUR PERFORMANCE |
| LA MÉTROLOGIE AU SERVICE DE VOTRE PERFORMANCE |

4407 rue Charleroi, Montréal-Nord (Québec)
H1H 1T6 Canada
TEL.: (514) 329-3242 / 1 888 774-6665
FAX : (514) 329-3750
info.canada@trescal.com

Certificat d'Étalonnage / Certificate of Calibration

CLIENT :
SERVICES POLYTESTS INC.
695-B GAUDETTE
ST-JEAN-SUR-RICHELIEU, QUEBEC

Description: VÉRIFICATEUR D'HUMIDITÉ / MOISTURE METER
Fabricant/ Manufacturer: DELMHORST
Modèle/ Model : MCS-1 REFERENCE STANDARD
No série / Serial no : N/A
Inventaire / Asset # : EM-191

CERTIFICAT No / Certificate No: 312463

PROCÉDURE / Procedure :
TRESCAL - DELMHORST_MCS-1 REFERENCE STANDARD

aaaa - mm - jj
Date étalonnage/ Calibration Performed : 2020-12-29

Echéance/ Due Date : 2021-12-29

Type de résultat / *Results type* : As-Found = As-Left

Résultats d'essais / *Test results* : Conforme / In Tolerance

Conditions de mesure / Measurement conditions

TEMPÉRATURE / Temp. : 23°C

HUMIDITÉ / Humidity : 36% RH

Usage restreint/ *Restricted use* : ☐

Réparation effectuée / *Repair performed* : ☐

Ajustement effectué / *Adjustment performed* : ☐

ÉTALONS UTILISÉS/ Standards Used:

Identification	Manuf.	Model	Description	Ser. #	Étalonné/ Cal.	Échéance/ Due
PR0373	H-P	34401A	MULTIMETER	US36069261	2020-11-13	2021-11-13

Les spécifications mentionnées comme limites de tolérances d'essai sont celles établies par le manufacturier, sauf indication contraire.
Test tolerance limits are based on manufacturers specifications unless stated otherwise.

NOTES :

2021-01-19

Technicien :
Technician

M. BARRAK

Le système qualité de la société est conforme aux exigences de la norme ISO 17025 et les étalons utilisés pour le processus d'étalonnage sont retraçables au SI par l'entremise du CNRC et/ou du NIST.
Our quality system complies with the requirements of ISO 17025 and the standards used for the calibration are traceable to SI through NRC and/or NIST.

Trescal
| CALIBRATION SOLUTIONS TO IMPROVE YOUR PERFORMANCE |
| LA MÉTROLOGIE AU SERVICE DE VOTRE PERFORMANCE |

Certificat d'Étalonnage
Certificate of Calibration

312463

CLIENT / Customer : SERVICES POLYTESTS INC.

DESCRIPTION / Description : VÉRIFICATEUR D'HUMIDITÉ / MOISTURE METER

MANUFACTURIER / Manufacturer : DELMHORST

MODÈLE / Model : MCS-1 REFERENCE STANDARD

DESCRIPTION Description		LIMITES Limits	LECTURES Readings	LIMITES Limits
DOUGLAS-FIR @ 80°F	**Nominal**			**Déviation** *Mohms*
12 %	120 MOhms		115,9	4,1
22 %	1,10 MOhms		1,096	0,005

S:\CERTIFICAT\MANUFACTURER\DELMHORST\MCS-1 REFERENCE STANDARD

FORME : REV. 2011-12-13

COMPLIANT 17025

Instrumentation Saint•Laurent inc.
Accrédité ISO 17025

CLAS NRC·CNRC CLAS 2010-02

SCC Accredited LAB Accrédité CCN N°669

80 rue de la montagne
St-Joseph du lac
(Québec), J0N 1M0
Tél: (450) 473-6169
Fax: (450) 473-5207
Email: inst.st-laurent@videotron.ca

CERTIFICAT D'ÉTALONNAGE

No.Certificat: CE-EM-006 23/03/20

CLIENT	
Compagnie:	Services Polytests Inc
Adresse:	695 B rue Gaudette
	St-Jean-sur-Richelieu, Québec, J3B 7S7

SPÉCIFICATION DE CALIBRATION	
Procédure de service:	4IN9106
Précision requise:	+\-0.25"H2O
Fréquence d'étalonnage: (jours)	365

SPÉCIFICATION DE L'INSTRUMENT			
Type d'instrument:	Indicateur	**Type d'entrée:**	Pression
Manufacturier:	Dwyer	**Type de sortie:**	Digitale
No. Model:	MS-321-LCD	**Type de mesure:**	Pression
No. Série:	E47U020014	**Gamme:**	0-0.5"H2O
Emplacement:	N.A.	**No. Machine:**	N.A.

SPÉCIFICATION DE L'ÉTALON			
Étalon Utilisé:	Setra	**No. du certificat d'étalonnage:**	2020001510
No. Série:	2784759	**Dernière date d'étalonnage:**	5-Mar-20
Certificat fait par:	Alpha Controls	**Prochaine date d'étalonnage:**	5-Mar-21
Commentaire:			

SPÉCIFICATION DE L'ÉTALON			
Étalon Utilisé:	Fluke 744	**No. du certificat d'étalonnage:**	2019007064
No. Série:	8139009	**Dernière date d'étalonnage:**	18-Oct-19
Certificat fait par:	Alpha Controls	**Prochaine date d'étalonnage:**	18-Oct-20
Commentaire:			

RÉSULTAT D'ÉTALONNAGE

Entrée Source	Valeur Donnée	Valeur Actuelle	Erreur de Déviation	Valeur après Étalonnage	Incertitude Élargie	Commentaire
0.0000 "H2O	0.000 "H2O	0.000 "H2O	0.000 "H2O	0.000 "H2O	0.25 "H2O	Vérification indicateur
0.2500 "H2O	0.250 "H2O	0.249 "H2O	-0.001 "H2O	0.249 "H2O	0.25 "H2O	Vérification indicateur
0.5000 "H2O	0.500 "H2O	0.500 "H2O	0.000 "H2O	0.500 "H2O	0.25 "H2O	Vérification indicateur
0.7500 "H2O	0.750 "H2O	0.750 "H2O	0.000 "H2O	0.750 "H2O	0.25 "H2O	Vérification indicateur
1.0000 "H2O	1.000 "H2O	0.994 "H2O	-0.006 "H2O	0.994 "H2O	0.25 "H2O	Vérification indicateur
0.0000 "H2O	0.0000 V.DC.	0.0004 V.DC.	+0.0004 V.DC.	0.0004 V.DC.	0.5 V.DC.	Vérification sortie analogique
0.2500 "H2O	2.5000 V.DC.	2.4853 V.DC.	-0.0147 V.DC.	2.4853 V.DC.	0.5 V.DC.	Vérification sortie analogique
0.5000 "H2O	5.0000 V.DC.	4.9780 V.DC.	-0.0220 V.DC.	4.9780 V.DC.	0.5 V.DC.	Vérification sortie analogique
0.7500 "H2O	7.5000 V.DC.	7.5042 V.DC.	0.0042 V.DC.	7.5042 V.DC.	0.5 V.DC.	Vérification sortie analogique
1.0000 "H2O	10.0000 V.DC.	9.9672 V.DC.	-0.0328 V.DC.	9.9672 V.DC.	0.5 V.DC.	Vérification sortie analogique

Conditions Environnementales: Température: 20 °C Humidité: 31 %RH

Type d'Étalonnage:

Instrumentation Saint•Laurent inc.
Accrédité ISO 17025

CLAS NRC·CNRC
CLAS 2010-02

SCC Accredited LAB
LAB Accrédité CCN
N°669

80 rue de la montagne
St-Joseph du lac
(Québec), J0N 1M0
Tél: (450) 473-6169
Fax: (450) 473-5207
Email: inst.st-laurent@videotron.ca

CERTIFICAT D'ÉTALONNAGE

No.Certificat: CE-EM-006 23/03/20

CLIENT	
Compagnie:	Services Polytests Inc
Adresse:	695 B rue Gaudette
	St-Jean-sur-Richelieu, Québec, J3B 7S7

SPÉCIFICATION DE CALIBRATION	
Procédure de service:	4IN9106
Précision requise:	+\-0.25"H2O
Fréquence d'étalonnage: (jours)	365

SPÉCIFICATION DE L'INSTRUMENT			
Type d'instrument:	Indicateur	**Type d'entrée:**	Pression
Manufacturier:	Dwyer	**Type de sortie:**	Digitale
No. Model:	MS-321-LCD	**Type de mesure:**	Pression
No. Série:	E47U020014	**Gamme:**	0-0.5"H2O
Emplacement:	N.A.	**No. Machine:**	N.A.

Instrumentation St-Laurent Inc. Certifie que l'instrument ci-haut, rencontre ou excède les spécifications établies par le fabriquant. Le système qualité de l'entreprise est conforme aux exigences de la norme ISO 17025 et les étalons utilisés pour effectuer l'étalonnage est retraçable au CNRC et/ou au NIST. Le degré d'incertitude est basé sur un niveau de confiance=95%, K=2.

DATE D'ÉTALONNAGE / ÉMISSION DU CERTIFICAT	
Date d'Étalonnage:	23 Mars 2020
Date du prochain Étalonnage:	23 Mars 2021
Date d'émission du certificat:	23 Mars 2020

CONFORMITÉ D'ÉTALONNAGE	Avant	Après
Conforme:	X	X
Non Conforme:		

Le Service d'évaluation des laboratoires d'étalonnage (CLAS) du Conseil national de recherches du Canada (CNRC) a évalué et certifié la capacité d'étalonnage du laboratoire et la traçabilité au Système international d'unités (SI) ou à des étalons acceptables selon le CLAS. Le présent certificat d'étalonnage est délivré conformément aux conditions de certification du CLAS et aux conditions d'accréditation du Conseil canadien des normes (CCN). Numéro d'accréditation du CCN: # 669. Le CLAS et le CCN ne garantissent pas l'exactitude des étalonnages individuels effectués par les laboratoires accrédités.

Martin Langlais - Technicien

2020-03-30

5F09106

DISPERSION
Laboratoire • Laboratory DIVISION • TRANSOIT CANADA

CLAS NRC CNRC
CLAS 2010-01

CERTIFICAT D'ÉTALONNAGE

9900 Chemin de la Côte-de-Liesse, Lachine, QC H8T 1A1
www.dispersion.ca 1.866.390.5066

Client :	Polytests	**No. du Certificat :**	**152-4BB901-181**
Adresse :	695 B rue Gaudette St-Jean-sur-Richelieu, QC J3B7S7	**Date d'étalonnage :**	09-01-2018

Technicien:
Simeonidis, Georgios

David Llorens, Responsable Qualité

DESCRIPTION DU SERVICE:

Description des masses :	ASTM E617	**Date d'approbation :**	09-01-2018
Classe de précision :	ASTM 6	**Date prochain étalonnage :**	09-01-2023
Densité :	7.95g/cm³	**Accrédtation CCN n. :**	668
Identification (si unique) :	EM-090	**Certification CLAS n. :**	2010-01

Condition d'essai :	Temp °C:	21.17	Pression kPa:	101.475	Humidité:	48.665

NOTES:

Pour l'étalonnage des masses, nous utilisons la procédure "Comparaison individuelle" PDL-09-MG-001 et la procédure "Détermination des incertitudes" PDL-09-MG-002. Le droit d'auteur du présent certificat appartient au laboratoire délivreur et doit être reproduit intégralement, à moins d'une autorisation écrite du laboratoire délivreur.

REMARQUES:

11 JAN. 2018

DISPERSION
Laboratoire • Laboratory DIVISION • TRINSCOT CANADA

CLAS ARC CARC
CLAS 2010-01

CERTIFICAT D'ÉTALONNAGE

9900 Chemin de la Côte-de-Liesse, Lachine, QC H8T 1A1
www.dispersion.ca 1.866.390.5066

Client :	Polytests	**No. du Certificat :**	**152-4BB901-181**
Adresse :	695 B rue Gaudette	**Accrédtation CCN n. :**	668
	St-Jean-sur-Richelieu, QC	**Certification CLAS n. :**	2010-01
	J3B7S7	**Classe d'exactitude :**	ASTM 6
		Date d'étalonnage :	09-01-2018
Masse :	2 kg	**Date du prochain étalonnage :**	09-01-2023

RÉSULTAT DE L'ÉTALONNAGE, MASSE CONVENTIONNELLE:

Valeur Nominale	No de série	No d'inventaire	Masse conventionnelle	Masse conventionnelle après ajustement	Tolérance ± (mg)	Incertitudes ± (mg)
2 kg		EM-090	2.0001538 kg		200 mg	2.0 mg

S.P.

DISPERSION
Laboratoire • Laboratory DIVISION • TRANSCAT CANADA

CLAS
NRC CNRC
CLAS 2010-01

CERTIFICAT D'ÉTALONNAGE

9900 Chemin de la Côte-de-Liesse, Lachine, QC H8T 1A1
www.dispersion.ca 1.866.390.5066

Client :	Polytests	**No. du Certificat :**	**152-4BB901-181**
Adresse :	695 B rue Gaudette	**Accrédtation CCN n. :**	668
	St-Jean-sur-Richelieu, QC	**Certification CLAS n. :**	2010-01
	J3B7S7	**Classe d'exactitude :**	ASTM 6
		Date d'étalonnage :	09-01-2018
Masse :	2 kg	**Date du prochain étalonnage :**	09-01-2023

RÉSULTAT DE L'ÉTALONNAGE DES POIDS, CORRECTIONS:

Valeur Nominale	No de série	No d'inventaire	Masse conventionnelle Correction	Masse conventionnelle Correction après ajustement	Tolérance ± (mg)	Incertitudes ± (mg)
2 kg		EM-090	153.8 mg		200 mg	2.0 mg

BALANCES UTILISÉES

Pour l'étalonnage manuel :

> 5 kg à 25 kg :	Mettler Toledo XP32003L, SNR 1123271214, max. 32100 g, d = 0.005 g
> 1 kg à 5 kg	Mettler Toledo PR5003, SNR 1115311634, max. 5100 g, d = 0.001 g
> 300 g à 2 kg :	Mettler Toledo XP2004S, SNR B131185222, max. 2100 g, d = 0.1 mg
> 100 g à 200 g :	Mettler Toledo AT201 SNR BA1115230146, max. 205 g, d = 0.01 mg
> 5 g à 100 g :	Mettler Toledo AX106 SNR 1127063924, max. 111 g, d = 1 µg
1 mg à 5 g :	Mettler UMX5, SNR 1121103055, max. 5.1 g, d = 0.1 µg

Pour l'étalonnage automatisé :

> 200 g à 1 kg :	Mettler Toledo AX1005 SNR 1127063210, max. 1109 g, d = 0.01 mg
> 5 g à 100 g :	Mettler Toledo AX106 SNR 1120143015, max. 111 g, d = 1 µg
1 mg à 5 g :	Mettler UMX5, SNR 1125140561, max. 5.1 g, d = 0.1 µg

Les balances sont vérifiées selon notre procédure de contrôle périodique PDL-11-MG-001.

INCERTITUDES:

Les incertitudes que nous retrouvons comprennent :

1. *L'incertitude associée à l'opération de pesage.*
2. *L'incertitude associée à la densité de l'air.*
3. *L'incertitude associée à l'étalon utilisé.*
4. *L'incertitude associée à la densité de la masse à être étalonnée.*

L'incertitude de l'opération de pesage comprend la reproductibilité à long terme.

Les incertitudes précisées dans ce rapport sont des incertitudes élargies représentant un niveau de confiance d'approximativement 95 %, obtenu en multipliant ensemble l'incertitude-type composée par un facteur de couverture de k = 2. Pour de plus amples renseignements, veuillez consulter la publication GUM (Guide pour l'expression de l'incertitude de mesure, édition de 1995).

TRAÇABILITÉ

Le Service d'évaluation de laboratoires d'étalonnage (CLAS) du Conseil national de recherches du Canada (CNRC) a évalué et a certifié des capacités d'étalonnage spécifiques de ce laboratoire et leur traçabilité à des étalons nationaux de mesure reconnus et au Système international d'unités (SI). Ce certificat d'étalonnage est émis conformément aux conditions de certification accordées par CLAS et aux conditions d'accréditation accordées par le Conseil canadien des normes (CCN). Le CLAS pas plus que le CCN ne peut garantir l'exactitude des étalonnages individuels effectués par des laboratoires accrédités.

S.P.

CERTIFICAT D'ÉTALONNAGE

9900 Chemin de la Côte-de-Liesse, Lachine, QC H8T 1A1
www.dispersion.ca 1.866.390.5066

RÉFÉRENCES UTILISÉES

Poids	No de série	Fabricant	Date d'étalonnage	Date due
20kg	69976	Troemner	30-05-2017	30-05-2018
5kg	129099	Mettler Toledo	02-09-2017	02-09-2018
5kg	96-0888-50-3	Denver Instrument Company	02-09-2017	02-09-2018
2kg	129098	Mettler Toledo	02-09-2017	02-09-2018
2kg	96-0888-50-3	Denver Instrument Company	02-09-2017	02-09-2018
300g	96-0888-50-2	Denver Instrument Company	02-09-2017	02-09-2018
1kg - 1mg	MT-01	Mettler Toledo	02-09-2017	02-09-2018

ÉTALONS CERTFIÉS PAR LE CNRC(**Référence NRC MS-2016-0021**)

Poids	No de série	Fabricant	Date d'étalonnage	Date due
100g	95170	Mettler Toledo	17-10-2016	17-10-2018
10kg	129100	Mettler Toledo	17-10-2016	17-10-2018
1kg	95171	Mettler Toledo	17-10-2016	17-10-2018

RÉFÉRENCES DE LA STATION ROBOTISÉE

Poids	No de série	Fabricant	Date d'étalonnage	Date due
1kg - 1mg	DK000A132	Laboratoire Dispersion	01-08-2017	01-08-2018

DP

ID Certificat de Calibration
520501-020-122120-ACC-USI

METTLER TOLEDO

Mettler-Toledo Inc.
Service Division
1900 Polaris Parkway
Columbus, OH 43240
1-800-METTLER

Accredited by the American Association for Laboratory Accreditation (A2LA)
CALIBRATION CERT #1902.01

ISO 17025 Registered
ANSI/NCSL Z540-1 Accredited

Certificat de Calibration de Précision

Accuracy Calibration Certificate

Client

Compagnie:	Services Polytests		
Adresse:	695-B Rue Gaudette		
Ville:	Saint-Jean-Sur-Richelieu	Contact:	Danick Power
Zip/Code Postal:	J3B 7S7		
État/Province:	Quebec		

Weighing Device

Manufacturier:	RICE LAKE	Type d'Instrument:	Weighing Instrument
Modèle:	4X4HP-10K	# Outil:	EM-114 EM-137
No. Série:	C18395	Modèle Indicateur:	IQ+355
Building:	N/D	Terminal Serial No.:	164851
Floor:	N/D	Terminal Asset No.:	N/D
Room:	N/D		

Plage	Capacité Max	Lisibilité (d)
1	400 kg	0.05 kg

Procedure

Instruction de Calibration:	EURAMET cg-18 v. 4.0 (11/2015)
Instruction de travail METTLER TOLEDO:	30260953

Ce certificat de calibration contient des mesures pour la calibration Tel que Trouvé. Aucune calibration Tel que Laissé n'a été effectuée puisque l'appareil n'a pas été modifié suite à la calibration Tel que Trouvé. Par conséquent, les résultats Tel que Laissé correspondent aux résultats Tel que Trouvé.

The calibration was agreed with the user below the maximum capacity of the balance.

	Temperature	
Tel que Trouvé	Start: 20.0 °C	End: 20.0 °C

Environmental conditions have been verified to ensure the accuracy of the calibration.

This certificate is issued in accordance with the conditions of accreditation granted by A2LA, which is based on ISO/IEC 17025. A2LA has assessed the measurement capability of the laboratory and its traceability to recognized national standards.

Date calibration Tel que Trouvé:	21-12-2020	Authorized A2LA Signatory:	
Date calibration Tel que Laissé:	N/D		Stephane Poisson
Date d'Émission:	21-12-2020		
Requested Next Calibration Date:	31-12-2021		

22 déc. 2020

Résultats de Mesure

Répétabilité

Charge de Test: 70 kg

	Tel que Trouvé	Tel que Laissé
1	70.00 kg	N/D
2	70.00 kg	N/D
3	70.00 kg	N/D
4	70.00 kg	N/D
5	70.00 kg	N/D
6	70.00 kg	N/D

Écart Type	**0.000 kg**	**N/D**

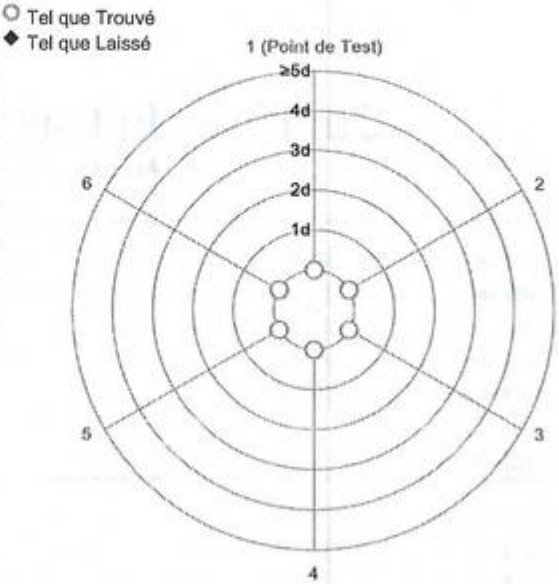

The "d" in the graph represents the readability of the range/interval in which the test was performed.

The results of this graph are based upon the absolute values of the differences from the mean value.

Excentricité

Charge de Test: 50 kg

Position	Tel que Trouvé	Tel que Laissé
1	50.00 kg	N/D
2	50.00 kg	N/D
3	50.00 kg	N/D
4	50.00 kg	N/D
5	50.00 kg	N/D

Déviation Maximale	**0.00 kg**	**N/A**

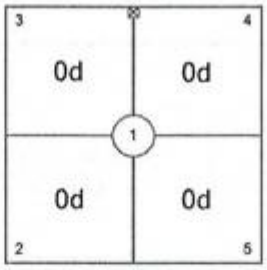

Tel que Trouvé

The "d" in the graph represents the readability of the range/interval in which the test was performed.

Erreur d'indication

Tel que Trouvé

	Reference Value	Indication	Erreur d'indication	Incertitude Élargie	k
1	0 kg	0.00 kg	0.00 kg	0.029 kg	2
2	35 kg	35.00 kg	0.00 kg	0.041 kg	2
3	75 kg	75.00 kg	0.00 kg	0.041 kg	2
4	110 kg	110.00 kg	0.00 kg	0.042 kg	2
5	150 kg	150.05 kg	0.05 kg	0.043 kg	2
6	110 kg	110.00 kg	0.00 kg	0.042 kg	2
7	75 kg	75.00 kg	0.00 kg	0.041 kg	2
8	35 kg	35.00 kg	0.00 kg	0.041 kg	2
9	0 kg	0.00 kg	0.00 kg	0.029 kg	2

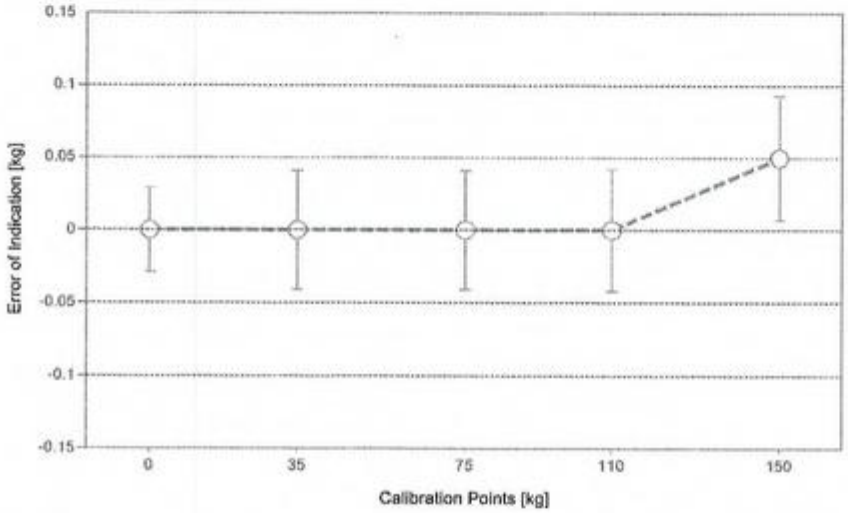

○ Tel que Trouvé

◆ Tel que Laissé

For improved legibility of the graphics only increasing measurement points are shown and measurement points close to zero are not displayed.

The uncertainty stated is the expanded uncertainty at calibration obtained by multiplying the standard combined uncertainty by the coverage factor k – which can be larger than 2 according to EURAMET cg-18. The value of the measurand lies within the assigned range of values with a probability of approximately 95%. The user is responsible for maintaining environmental conditions and the settings of the weighing instrument when it was calibrated.

Test Equipment

Tous les poids utilisés pour le contrôle métrologique sont retraçables aux étalons Nationaux et Internationaux. Les poids ont été calibrés et certifiés par un laboratoire de calibration accrédité.

Jeu de Poids 1: OIML M1

Weight Set Number:	67094	Date d'Émission:	11-09-2020
# Certificat:	M20-0351	Date de Calibration Due:	11-09-2021

Jeu de Poids 2: OIML M1

Weight Set Number:	S	Date d'Émission:	28-05-2020
# Certificat:	1412741	Date de Calibration Due:	28-05-2021

Remarques

N/D

End of Accredited Section

The information below and any attachments to this calibration certificate are not part of the accredited calibration.

Incertitude de Mesure du dispositif de pesage en opération

Stated is the expanded uncertainty with k=2 in use. The formula shall be used for the estimation of the uncertainty under consideration of the errors of indication. The value R represents the net load indication in the unit of measure of the device.

Coefficient de température pour l'évaluation de l'incertitude de mesure en opération: $10.0 \cdot 10^{-6}$ / K

Plage d'opération sur le site pour l'évaluation de l'incertitude de mesure en opération: 20 K

Linéarisation de l'Équation d'Incertitude

	Plage		Tel que Trouvé	Tel que Laissé
	d	Max		
1	0.05 kg	150 kg	U_1 = 41 g + 0.711 g/kg · R	N/A

To optimize the stability of the linearization, besides of the zero load only increasing measurement points with a test load of 5% of the measurement range or larger are taken for the calculation of the linear equation.

Absolute and Relative Measurement Uncertainty in Use for Various Net Indications (Examples)

Indication Net	Tel que Trouvé		Tel que Laissé	
1.50 kg	0.042 kg	2.8%	N/A	N/A
15.00 kg	0.052 kg	0.34%	N/A	N/A
30.00 kg	0.062 kg	0.21%	N/A	N/A
75.00 kg	0.094 kg	0.13%	N/A	N/A
150.00 kg	0.15 kg	0.098%	N/A	N/A

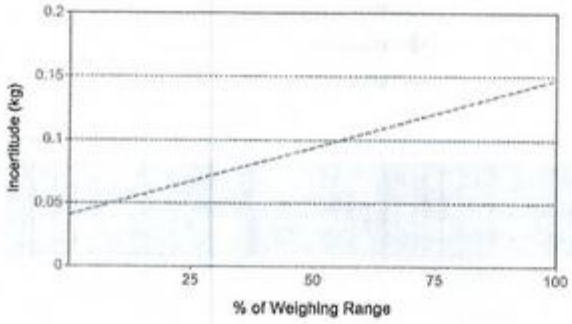

Tel que Trouvé

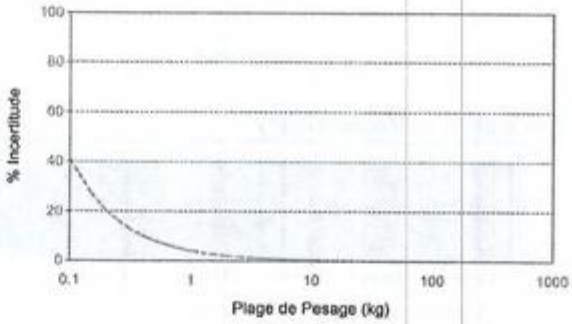

Tel que Laissé

METTLER TOLEDO Service

Handbook 44 Tolerance Assessment (Entretien)

Assessment done without considering measurement uncertainty.
Les mesures du certificat de calibration joint ont été évaluées selon les tolérances définies par NIST HB44.

	Tel que Trouvé	Tel que Laissé
Global	✓	N/D

✓ = Passed
✗ = Failed

Weighing Device

Range	Max. Capacity	Readability (d)	Verification Scale Interval (e)	Class
1	400 kg	0.05 kg	0.05 kg	III

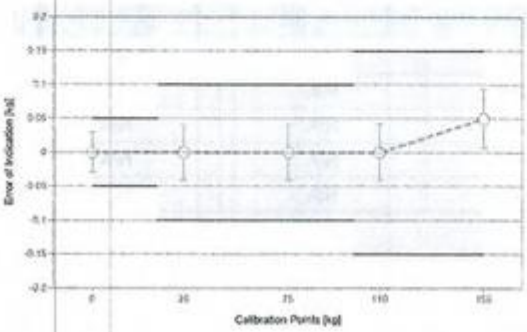

Tolerances according to NIST Handbook 44

Test Load		Tolérance
From	To	
0.00 kg	0.00 kg	0.0125 kg
0.05 kg	25.00 kg	0.05 kg
25.05 kg	100.00 kg	0.1 kg
100.05 kg	150.00 kg	0.15 kg

○ Tel que Trouvé
◆ Tel que Laissé
— Tolérance

Eccentricity and Repeatability

Test	Test Load	Tolérance	As Found		As Left	
			Max. Error / Range	Result	Max. Error / Range	Result
Excentricité (Maximum Error)	50 kg	0.10 kg	0.00 kg	✓	N/D	N/D
Excentricité (Plage)	50 kg	0.1 kg	0.00 kg	✓	N/D	N/D
Répétabilité (Maximum Error)	70 kg	0.1 kg	0.00 kg	✓	N/D	N/D
Répétabilité (Plage)	70 kg	0.10 kg	0.00 kg	✓	N/D	N/D

Max. Error: Maximum of the absolute values of the individual errors.
Range: Difference between largest and smallest measurement value.

Error of Indication

	Reference Value	Tolérance	As Found		As Left	
			Error of Indication	Result	Error of Indication	Result
1	0 kg	0.05 kg	0.00 kg	✓	N/D	N/D
2	35 kg	0.10 kg	0.00 kg	✓	N/D	N/D
3	75 kg	0.10 kg	0.00 kg	✓	N/D	N/D
4	110 kg	0.15 kg	0.00 kg	✓	N/D	N/D
5	150 kg	0.15 kg	0.05 kg	✓	N/D	N/D
6	110 kg	0.15 kg	0.00 kg	✓	N/D	N/D
7	75 kg	0.10 kg	0.00 kg	✓	N/D	N/D
8	35 kg	0.10 kg	0.00 kg	✓	N/D	N/D
9	0 kg	0.05 kg	0.00 kg	✓	N/D	N/D

Instrumentation Saint•Laurent inc.
Accrédité ISO 17025

CLAS NRC·CNRC CLAS 2010-02

SCC Accredited LAB Accrédité CCN N°669

80 rue de la montagne
St-Joseph du lac
(Québec), J0N 1M0
Tél: (450) 473-6169
Fax: (450) 473-5207
Email: inst.st-laurent@videotron.ca

CERTIFICAT D'ÉTALONNAGE

No.Certificat: CE-EM-126 09/03/20

CLIENT	
Compagnie:	Services Polytests Inc
Adresse:	695 B rue Gaudette
	St-Jean-sur-Richelieu, Québec, J3B 7S7

SPÉCIFICATION DE CALIBRATION	
Procédure de service:	4IN9106
Précision requise:	+\- 1"Hg
Fréquence d'étalonnage: (jours)	365

SPÉCIFICATION DE L'INSTRUMENT			
Type d'instrument:	Manomètre	**Type d'entrée:**	Pression
Manufacturier:	Dwyer	**Type de sortie:**	Digitale
No. Model:	DPG200	**Type de mesure:**	Pression
No. Série:	N.A.	**Gamme:**	0-28"Hg
Emplacement:	N.A.	**No. Machine:**	N.A.

SPÉCIFICATION DE L'ÉTALON			
Étalon Utilisé:	Crystal XP2i	**No. du certificat d'étalonnage:**	2019004641
No. Série:	258139	**Dernière date d'étalonnage:**	12-Jul-19
Certificat fait par:	Alpha Controls	**Prochaine date d'étalonnage:**	12-Jul-20
Commentaire:			

SPÉCIFICATION DE L'ÉTALON			
Étalon Utilisé:	Fluke 744	**No. du certificat d'étalonnage:**	2019007064
No. Série:	8139009	**Dernière date d'étalonnage:**	18-Oct-19
Certificat fait par:	Alpha Controls	**Prochaine date d'étalonnage:**	18-Oct-20
Commentaire:			

RÉSULTAT D'ÉTALONNAGE

Entrée Source	Valeur Donnée	Valeur Actuelle	Erreur de Déviation	Valeur après Étalonnage	Incertitude Élargie	Commentaire
0.00 "Hg	0.00 "Hg	0.00 "Hg	0.00 "Hg	0.00 "Hg	1 "Hg	Vérification indicateur
-7.50 "Hg	-7.50 "Hg	-7.61 "Hg	-0.11 "Hg	-7.61 "Hg	1 "Hg	Vérification indicateur
-15.00 "Hg	-15.00 "Hg	-15.23 "Hg	-0.23 "Hg	-15.23 "Hg	1 "Hg	Vérification indicateur
-22.50 "Hg	-22.50 "Hg	-22.86 "Hg	-0.36 "Hg	-22.86 "Hg	1 "Hg	Vérification indicateur
-28.00 "Hg	-28.00 "Hg	-28.45 "Hg	-0.45 "Hg	-28.45 "Hg	1 "Hg	Vérification indicateur
0.00 "Hg	10.0000 V.DC.	10.0546 V.DC.	+0.0546 V.DC.	10.0546 V.DC.	0.5 V.DC.	Vérification sortie analogique
-7.50 "Hg	8.0000 V.DC.	8.0366 V.DC.	+0.0366 V.DC.	8.0366 V.DC.	0.5 V.DC.	Vérification sortie analogique
-15.00 "Hg	6.0000 V.DC.	6.0071 V.DC.	+0.0071 V.DC.	6.0071 V.DC.	0.5 V.DC.	Vérification sortie analogique
-22.50 "Hg	4.0000 V.DC.	3.9609 V.DC.	-0.0391 V.DC.	3.9609 V.DC.	0.5 V.DC.	Vérification sortie analogique
-28.00 "Hg	2.5333 V.DC.	2.4630 V.DC.	-0.0703 V.DC.	2.4630 V.DC.	0.5 V.DC.	Vérification sortie analogique

Conditions Environnementales: Température: 20 °C Humidité: 23 %RH

Type d'Étalonnage:

5F09106

Instrumentation Saint•Laurent inc.
Accrédité ISO 17025

CLAS NRC·CNRC
CLAS 2010-02

SCC Accredited LAB
LAB Accrédité CCN
N°669

80 rue de la montagne
St-Joseph du lac
(Québec), J0N 1M0
Tél: (450) 473-6169
Fax: (450) 473-5207
Email: inst.st-laurent@videotron.ca

CERTIFICAT D'ÉTALONNAGE

No.Certificat: CE-EM-126 09/03/20

CLIENT	
Compagnie:	Services Polytests Inc
Adresse:	695 B rue Gaudette
	St-Jean-sur-Richelieu, Québec, J3B 7S7

SPÉCIFICATION DE CALIBRATION	
Procédure de service:	4IN9106
Précision requise:	+\- 1"Hg
Fréquence d'étalonnage: (jours)	365

SPÉCIFICATION DE L'INSTRUMENT			
Type d'instrument:	Manomètre	**Type d'entrée:**	Pression
Manufacturier:	Dwyer	**Type de sortie:**	Digitale
No. Model:	DPG200	**Type de mesure:**	Pression
No. Série:	N.A.	**Gamme:**	0-28"Hg
Emplacement:	N.A.	**No. Machine:**	N.A.

Instrumentation St-Laurent Inc. Certifie que l'instrument ci-haut, rencontre ou excède les spécifications établies par le fabriquant. Le système qualité de l'entreprise est conforme aux exigences de la norme ISO 17025 et les étalons utilisés pour effectuer l'étalonnage est retraçable au CNRC et/ou au NIST. Le degré d'incertitude est basé sur un niveau de confiance=95%, K=2.

DATE D'ÉTALONNAGE / ÉMISSION DU CERTIFICAT	
Date d'Étalonnage:	9 Mars 2020
Date du prochain Étalonnage:	9 Mars 2021
Date d'émission du certificat:	9 Mars 2020

CONFORMITÉ D'ÉTALONNAGE		
	Avant	**Après**
Conforme:	X	X
Non Conforme:		

Le Service d'évaluation des laboratoires d'étalonnage (CLAS) du Conseil national de recherches du Canada (CNRC) a évalué et certifié la capacité d'étalonnage du laboratoire et la traçabilité au Système international d'unités (SI) ou à des étalons acceptables selon le CLAS. Le présent certificat d'étalonnage est délivré conformément aux conditions de certification du CLAS et aux conditions d'accréditation du Conseil canadien des normes (CCN). Numéro d'accréditation du CCN: # 669. Le CLAS et le CCN ne garantissent pas l'exactitude des étalonnages individuels effectués par les laboratoires accrédités.

Martin Langlais - Technicien

2020 MARS 30

5F09106

Instrumentation Saint•Laurent Inc.
Accrédité ISO 17025

CLAS NRC·CNRC CLAS 2010-02

SCC Accredited LAB Accrédité CCN N°669

80 rue de la montagne
St-Joseph du lac
(Québec), J0N 1M0
Tél: (450) 473-6169
Fax: (450) 473-5207
Email: inst.st-laurent@videotron.ca

CERTIFICAT D'ÉTALONNAGE

No.Certificat: CE-EM-127 09/03/20

CLIENT	
Compagnie:	Services Polytests Inc
Adresse:	695 B rue Gaudette
	St-Jean-sur-Richelieu, Québec, J3B 7S7

SPÉCIFICATION DE CALIBRATION	
Procédure de service:	4IN9106
Précision requise:	+\- 1"Hg
Fréquence d'étalonnage: (jours)	365

SPÉCIFICATION DE L'INSTRUMENT			
Type d'instrument:	Manomètre	**Type d'entrée:**	Pression
Manufacturier:	Dwyer	**Type de sortie:**	Digitale
No. Model:	DPG200	**Type de mesure:**	Pression
No. Série:	N.A.	**Gamme:**	0-28"Hg
Emplacement:	N.A.	**No. Machine:**	N.A.

SPÉCIFICATION DE L'ÉTALON			
Étalon Utilisé:	Crystal XP2i	**No. du certificat d'étalonnage:**	2019004641
No. Série:	258139	**Dernière date d'étalonnage:**	12-Jul-19
Certificat fait par:	Alpha Controls	**Prochaine date d'étalonnage:**	12-Jul-20
Commentaire:			

SPÉCIFICATION DE L'ÉTALON			
Étalon Utilisé:	Fluke 744	**No. du certificat d'étalonnage:**	2019007064
No. Série:	8139009	**Dernière date d'étalonnage:**	18-Oct-19
Certificat fait par:	Alpha Controls	**Prochaine date d'étalonnage:**	18-Oct-20
Commentaire:			

RÉSULTAT D'ÉTALONNAGE

Entrée Source	Valeur Donnée	Valeur Actuelle	Erreur de Déviation	Valeur après Étalonnage	Incertitude Élargie	Commentaire
0.00 "Hg	0.00 "Hg	0.00 "Hg	0.00 "Hg	0.00 "Hg	1 "Hg	Vérification indicateur
-7.50 "Hg	-7.50 "Hg	-7.51 "Hg	-0.01 "Hg	-7.51 "Hg	1 "Hg	Vérification indicateur
-15.00 "Hg	-15.00 "Hg	-15.03 "Hg	-0.03 "Hg	-15.03 "Hg	1 "Hg	Vérification indicateur
-22.50 "Hg	-22.50 "Hg	-22.57 "Hg	-0.07 "Hg	-22.57 "Hg	1 "Hg	Vérification indicateur
-28.00 "Hg	-28.00 "Hg	-28.10 "Hg	-0.10 "Hg	-28.10 "Hg	1 "Hg	Vérification indicateur
0.00 "Hg	10.0000 V.DC.	9.9990 V.DC.	-0,0010 V.DC.	9,9990 V.DC.	0.5 V.DC.	Vérification sortie analogique
-7.50 "Hg	8.0000 V.DC.	8.0128 V.DC.	+0.0128 V.DC.	8.0128 V.DC.	0.5 V.DC.	Vérification sortie analogique
-15.00 "Hg	6.0000 V.DC.	6.0177 V.DC.	+0.0177 V.DC.	6.0177 V.DC.	0.5 V.DC.	Vérification sortie analogique
-22.50 "Hg	4.0000 V.DC.	3.9973 V.DC.	-0.0027 V.DC.	3.9973 V.DC.	0.5 V.DC.	Vérification sortie analogique
-28.00 "Hg	2.5333 V.DC.	2.5184 V.DC.	-0.0149 V.DC.	2.5184 V.DC.	0.5 V.DC.	Vérification sortie analogique

Conditions Environnementales: Température: 20 °C Humidité: 23 %RH

Type d'Étalonnage:

5F09106

Instrumentation Saint•Laurent inc.
Accrédité ISO 17025

CLAS NRC·CNRC
CLAS 2010-02

SCC Accredited LAB
LAB Accrédité CCN
N°669

80 rue de la montagne
St-Joseph du lac
(Québec), J0N 1M0
Tél: (450) 473-6169
Fax: (450) 473-5207
Email: inst.st-laurent@videotron.ca

CERTIFICAT D'ÉTALONNAGE

No.Certificat: CE-EM-127 09/03/20

CLIENT	
Compagnie:	Services Polytests Inc
Adresse:	695 B rue Gaudette
	St-Jean-sur-Richelieu, Québec, J3B 7S7

SPÉCIFICATION DE CALIBRATION	
Procédure de service:	4IN9106
Précision requise:	+\- 1"Hg
Fréquence d'étalonnage: (jours)	365

SPÉCIFICATION DE L'INSTRUMENT			
Type d'instrument:	Manomètre	**Type d'entrée:**	Pression
Manufacturier:	Dwyer	**Type de sortie:**	Digitale
No. Model:	DPG200	**Type de mesure:**	Pression
No. Série:	N.A.	**Gamme:**	0-28"Hg
Emplacement:	N.A.	**No. Machine:**	N.A.

Instrumentation St-Laurent Inc. Certifie que l'instrument ci-haut, rencontre ou excède les spécifications établies par le fabriquant. Le système qualité de l'entreprise est conforme aux exigences de la norme ISO 17025 et les étalons utilisés pour effectuer l'étalonnage est retraçable au CNRC et/ou au NIST. Le degré d'incertitude est basé sur un niveau de confiance=95%, K=2.

DATE D'ÉTALONNAGE / ÉMISSION DU CERTIFICAT	
Date d'Étalonnage:	9 Mars 2020
Date du prochain Étalonnage:	9 Mars 2021
Date d'émission du certificat:	9 Mars 2020

CONFORMITÉ D'ÉTALONNAGE	Avant	Après
Conforme:	X	X
Non Conforme:		

Le Service d'évaluation des laboratoires d'étalonnage (CLAS) du Conseil national de recherches du Canada (CNRC) a évalué et certifié la capacité d'étalonnage du laboratoire et la traçabilité au Système international d'unités (SI) ou à des étalons acceptables selon le CLAS. Le présent certificat d'étalonnage est délivré conformément aux conditions de certification du CLAS et aux conditions d'accréditation du Conseil canadien des normes (CCN). Numéro d'accréditation du CCN: # 669. Le CLAS et le CCN ne garantissent pas l'exactitude des étalonnages individuels effectués par les laboratoires accrédités.

Martin Langlais - Technicien

2020-03-30

DISPERSION

Laboratoire • Laboratory DIVISION TRANSCAT CANADA

CLAS NRC CNRC
CLAS 2010-01

CERTIFICAT D'ÉTALONNAGE

9900 Chemin de la Côte-de-Liesse, Lachine, QC H8T 1A1
www.dispersion.ca 1.866.390.5066

Client :	Polytests	**No. du Certificat :**	**152-4BB901-182**
Adresse :	695 B rue Gaudette St-Jean-sur-Richelieu, QC J3B7S7	**Date d'étalonnage :**	09-01-2018

Technicien:
Simeonidis, Georgios

David Llorens, Responsable Qualité

DESCRIPTION DU SERVICE:

Description des masses :	ASTM E617	**Date d'approbation :**	09-01-2018
Classe de précision :	ASTM 1	**Date prochain étalonnage :**	09-01-2023
Densité :	7.95g/cm³	**Accrédtation CCN n. :**	668
Identification (si unique) :	(items multiples)	**Certification CLAS n. :**	2010-01

Condition d'essai :	Temp °C:	21.265	Pression kPa:	101.565	Humidité:	49.58

NOTES:

Pour l'étalonnage des masses, nous utilisons la procédure "Comparaison individuelle" PDL-09-MG-001 et la procédure "Détermination des incertitudes" PDL-09-MG-002. Le droit d'auteur du présent certificat appartient au laboratoire délivreur et doit être reproduit intégralement, à moins d'une autorisation écrite du laboratoire délivreur.

REMARQUES:

11 JAN. 2018

DISPERSION
Laboratoire • Laboratory DIVISION • TRANSCAT CANADA

CLAS
NRC CNRC
CLAS 2010-01

CERTIFICAT D'ÉTALONNAGE

9900 Chemin de la Côte-de-Liesse, Lachine, QC H8T 1A1
www.dispersion.ca 1.866.390.5066

Client :	Polytests	**No. du Certificat :**	**152-4BB901-182**
Adresse :	695 B rue Gaudette	**Accrédtation CCN n. :**	668
	St-Jean-sur-Richelieu, QC	**Certification CLAS n. :**	2010-01
	J3B7S7	**Classe d'exactitude :**	ASTM 1
		Date d'étalonnage :	09-01-2018
Masse :	100 mg - 200 g	**Date du prochain étalonnage :**	09-01-2023

RÉSULTAT DE L'ÉTALONNAGE, MASSE CONVENTIONNELLE:

Valeur Nominale	No de série	No d'inventaire	Masse conventionnelle	Masse conventionnelle après ajustement	Tolérance ± (mg)	Incertitudes ± (mg)
100 mg	1000014200	EM-128	99.9993 mg		0.010 mg	0.002 mg
200 g	1000026013	EM-129	199.99962 g		0.50 mg	0.10 mg

D.P.

DISPERSION
Laboratoire • Laboratory DIVISION • TRANSCOT CANADA

CLAS 2010-01

CERTIFICAT D'ÉTALONNAGE

9900 Chemin de la Côte-de-Liesse, Lachine, QC H8T 1A1
www.dispersion.ca 1.866.390.5066

Client :	Polytests	**No. du Certificat :**	**152-4BB901-182**
Adresse :	695 B rue Gaudette	**Accrédtation CCN n. :**	668
	St-Jean-sur-Richelieu, QC	**Certification CLAS n. :**	2010-01
	J3B7S7	**Classe d'exactitude :**	ASTM 1
		Date d'étalonnage :	09-01-2018
Masse :	100 mg - 200 g	**Date du prochain étalonnage :**	09-01-2023

RÉSULTAT DE L'ÉTALONNAGE DES POIDS, CORRECTIONS:

Valeur Nominale	No de série	No d'inventaire	Masse conventionnelle Correction	Masse conventionnelle Correction après ajustement	Tolérance ± (mg)	Incertitudes ± (mg)
100 mg	1000014200	EM-128	-0.0007 mg		0.010 mg	0.002 mg
200 g	1000026013	EM-129	-0.38 mg		0.50 mg	0.10 mg

D.P.

CERTIFICAT D'ÉTALONNAGE

9900 Chemin de la Côte-de-Liesse, Lachine, QC H8T 1A1
www.dispersion.ca 1.866.390.5066

BALANCES UTILISÉES

Pour l'étalonnage manuel :

> 5 kg à 25 kg :	Mettler Toledo XP32003L, SNR 1123271214, max. 32100 g, d = 0.005 g
> 1 kg à 5 kg	Mettler Toledo PR5003, SNR 1115311634, max. 5100 g, d = 0.001 g
> 300 g à 2 kg :	Mettler Toledo XP2004S, SNR B131185222, max. 2100 g, d = 0.1 mg
> 100 g à 200 g :	Mettler Toledo AT201 SNR BA1115230146, max. 205 g, d = 0.01 mg
> 5 g à 100 g :	Mettler Toledo AX106 SNR 1127063924, max. 111 g, d = 1 µg
1 mg à 5 g :	Mettler UMX5, SNR 1121103055, max. 5.1 g, d = 0.1 µg

Pour l'étalonnage automatisé :

> 200 g à 1 kg :	Mettler Toledo AX1005 SNR 1127063210, max. 1109 g, d = 0.01 mg
> 5 g à 100 g :	Mettler Toledo AX106 SNR 1120143015, max. 111 g, d = 1 µg
1 mg à 5 g :	Mettler UMX5, SNR 1125140561, max. 5.1 g, d = 0.1 µg

Les balances sont vérifiées selon notre procédure de contrôle périodique PDL-11-MG-001.

INCERTITUDES:

Les incertitudes que nous retrouvons comprennent :

1. *L'incertitude associée à l'opération de pesage.*
2. *L'incertitude associée à la densité de l'air.*
3. *L'incertitude associée à l'étalon utilisé.*
4. *L'incertitude associée à la densité de la masse à être étalonnée.*

L'incertitude de l'opération de pesage comprend la reproductibilité à long terme.

Les incertitudes précisées dans ce rapport sont des incertitudes élargies représentant un niveau de confiance d'approximativement 95 %, obtenu en multipliant ensemble l'incertitude-type composée par un facteur de couverture de k = 2. Pour de plus amples renseignements, veuillez consulter la publication GUM (Guide pour l'expression de l'incertitude de mesure, édition de 1995).

TRAÇABILITÉ

Le Service d'évaluation de laboratoires d'étalonnage (CLAS) du Conseil national de recherches du Canada (CNRC) a évalué et a certifié des capacités d'étalonnage spécifiques de ce laboratoire et leur traçabilité à des étalons nationaux de mesure reconnus et au Système international d'unités (SI). Ce certificat d'étalonnage est émis conformément aux conditions de certification accordées par CLAS et aux conditions d'accréditation accordées par le Conseil canadien des normes (CCN). Le CLAS pas plus que le CCN ne peut garantir l'exactitude des étalonnages individuels effectués par des laboratoires accrédités.

B.P.

CERTIFICAT D'ÉTALONNAGE

9900 Chemin de la Côte-de-Liesse, Lachine, QC H8T 1A1
www.dispersion.ca 1.866.390.5066

RÉFÉRENCES UTILISÉES

Poids	No de série	Fabricant	Date d'étalonnage	Date due
20kg	69976	Troemner	30-05-2017	30-05-2018
5kg	129099	Mettler Toledo	02-09-2017	02-09-2018
5kg	96-0888-50-3	Denver Instrument Company	02-09-2017	02-09-2018
2kg	129098	Mettler Toledo	02-09-2017	02-09-2018
2kg	96-0888-50-3	Denver Instrument Company	02-09-2017	02-09-2018
300g	96-0888-50-2	Denver Instrument Company	02-09-2017	02-09-2018
1kg - 1mg	MT-01	Mettler Toledo	02-09-2017	02-09-2018

ÉTALONS CERTFIÉS PAR LE CNRC(**Référence NRC MS-2016-0021**)

Poids	No de série	Fabricant	Date d'étalonnage	Date due
100g	95170	Mettler Toledo	17-10-2016	17-10-2018
10kg	129100	Mettler Toledo	17-10-2016	17-10-2018
1kg	95171	Mettler Toledo	17-10-2016	17-10-2018

RÉFÉRENCES DE LA STATION ROBOTISÉE

Poids	No de série	Fabricant	Date d'étalonnage	Date due
1kg - 1mg	DK000A132	Laboratoire Dispersion	01-08-2017	01-08-2018

S.P.

Instrumentation Saint•Laurent inc.
Accrédité ISO 17025

CLAS NRC·CNRC
CLAS 2010-02

SCC Accredited LAB
LAB Accrédité CCN
N°669

80 rue de la montagne
St-Joseph du lac
(Québec), J0N 1M0
Tél: (450) 473-6169
Fax: (450) 473-5207
Email: inst.st-laurent@videotron.ca

CERTIFICAT D'ÉTALONNAGE

No.Certificat: CE-EM-147 09/03/20

CLIENT	
Compagnie:	Services Polytests Inc
Adresse:	695 B rue Gaudette
	St-Jean-sur-Richelieu, Québec, J3B 7S7

SPÉCIFICATION DE CALIBRATION	
Procédure de service:	4IN9101
Précision requise:	+\- 2.0C
Fréquence d'étalonnage: (jours)	365

SPÉCIFICATION DE L'INSTRUMENT			
Type d'instrument:	Enregistreur	**Type d'entrée:**	Divers
Manufacturier:	Keithley	**Type de sortie:**	Digital
No. Model:	2700	**Type de mesure:**	Température
No. Série:	1349443	**Gamme:**	Divers
Emplacement:	N.A.	**No. Machine:**	N.A.

SPÉCIFICATION DE L'ÉTALON			
Étalon Utilisé:	Fluke 744	**No. du certificat d'étalonnage:**	2019007064
No. Série:	8139009	**Dernière date d'étalonnage:**	18-Oct-19
Certificat fait par:	Alpha Controls	**Prochaine date d'étalonnage:**	18-Oct-20
Commentaire:			

RÉSULTAT D'ÉTALONNAGE

Entrée Source	Valeur Donnée	Valeur Actuelle	Erreur de Déviation	Valeur après Étalonnage	Incertitude Élargie	Commentaire
Voir Commentaire						

Conditions Environnementales: Température: 20 °C Humidité: 23 %RH

Type d'Étalonnage: Data Acquisition system Conforme

Les 2 slot de l'enregistreur ont été vérifié.

Instrumentation St-Laurent Inc. Certifie que l'instrument ci-haut, rencontre ou excède les spécifications établies par le fabriquant. Le système qualité de l'entreprise est conforme aux exigences de la norme ISO 17025 et les étalons utilisés pour effectuer l'étalonnage est retraçable au CNRC et/ou au NIST. Le degré d'incertitude est basé sur un niveau de confiance=95%, K=2.

DATE D'ÉTALONNAGE / ÉMISSION DU CERTIFICAT	
Date d'Étalonnage:	9 Mars 2020
Date du prochain Étalonnage:	9 Mars 2021
Date d'émission du certificat:	9 Mars 2020

CONFORMITÉ D'ÉTALONNAGE	Avant	Après
Conforme:	X	X
Non Conforme:		

Le Service d'évaluation des laboratoires d'étalonnage (CLAS) du Conseil national de recherches du Canada (CNRC) a évalué et certifié la capacité d'étalonnage du laboratoire et la traçabilité au Système international d'unités (SI) ou à des étalons acceptables selon le CLAS. Le présent certificat d'étalonnage est délivré conformément aux conditions de certification du CLAS et aux conditions d'accréditation du Conseil canadien des normes (CCN). Numéro d'accréditation du CCN: # 669. Le CLAS et le CCN ne garantissent pas l'exactitude des étalonnages individuels effectués par les laboratoires accrédités.

Martin Langlais - Technicien

2020 - MARS 30

5F09101

Instrumentation Saint•Laurent Inc.
Accrédité ISO 17025

CLAS NRC·CNRC CLAS 2010-02

SCC Accredited LAB Accrédité CCN N°669

80 rue de la montagne
St-Joseph du lac
(Québec), J0N 1M0
Tél: (450) 473-6169
Fax: (450) 473-5207
Email: inst.st-laurent@videotron.ca

CERTIFICAT D'ÉTALONNAGE

No.Certificat: CE-EM-249 23/03/20

CLIENT	
Compagnie:	Services Polytests Inc
Adresse:	695 B rue Gaudette
	St-Jean-sur-Richelieu, Québec, J3B 7S7

SPÉCIFICATION DE CALIBRATION	
Procédure de service:	4IN9106
Précision requise:	+/- 0.25 "H2O
Fréquence d'étalonnage: (jours)	365

SPÉCIFICATION DE L'INSTRUMENT			
Type d'instrument:	Indicateur	**Type d'entrée:**	Pression
Manufacturier:	Dwyer	**Type de sortie:**	Voltage
No. Model:	MS-321-LCD	**Type de mesure:**	Pression
No. Série:	N/A	**Gamme:**	0 à 0.10 "H2O
Emplacement:	Banc de test	**No. Machine:**	N/A

SPÉCIFICATION DE L'ÉTALON			
Étalon Utilisé:	Setra	**No. du certificat d'étalonnage:**	2020001510
No. Série:	2784759	**Dernière date d'étalonnage:**	5-Mar-20
Certificat fait par:	Alpha Controls	**Prochaine date d'étalonnage:**	5-Mar-21
Commentaire:			

SPÉCIFICATION DE L'ÉTALON			
Étalon Utilisé:	Fluke 744	**No. du certificat d'étalonnage:**	2019007064
No. Série:	8139009	**Dernière date d'étalonnage:**	18-Oct-19
Certificat fait par:	Alpha Controls	**Prochaine date d'étalonnage:**	18-Oct-20
Commentaire:			

RÉSULTAT D'ÉTALONNAGE

Entrée Source	Valeur Donnée	Valeur Actuelle	Erreur de Déviation	Valeur après Étalonnage	Incertitude Élargie	Commentaire
0.0000 "H2O	0.0000 "H2O	0.0002 "H2O	0.0002 "H2O	0.0002 "H2O	0.25 "H2O	Vérification indicateur
0.0250 "H2O	0.0250 "H2O	0.0241 "H2O	-0.0009 "H2O	0.0241 "H2O	0.25 "H2O	Vérification indicateur
0.0500 "H2O	0.0500 "H2O	0.0530 "H2O	0.0030 "H2O	0.0530 "H2O	0.25 "H2O	Vérification indicateur
0.0750 "H2O	0.0750 "H2O	0.0745 "H2O	-0.0005 "H2O	0.0745 "H2O	0.25 "H2O	Vérification indicateur
0.1000 "H2O	0.1000 "H2O	0.0984 "H2O	-0.0016 "H2O	0.0984 "H2O	0.25 "H2O	Vérification indicateur
0.0000 "H2O	0.0000 V.DC.	0.0006 V.DC.	+0.0006 V.DC.	0.0006 V.DC.	0.5 V.DC.	Vérification sortie analogique
0.0250 "H2O	2.5000 V.DC.	2.4667 V.DC.	-0.0333 V.DC.	2.4667 V.DC.	0.5 V.DC.	Vérification sortie analogique
0.0500 "H2O	5.0000 V.DC.	5.0312 V.DC.	0.0312 V.DC.	5.0312 V.DC.	0.5 V.DC.	Vérification sortie analogique
0.0750 "H2O	7.5000 V.DC.	7.4588 V.DC.	-0.0412 V.DC.	7.4588 V.DC.	0.5 V.DC.	Vérification sortie analogique
0.1000 "H2O	10.0000 V.DC.	9.8590 V.DC.	-0.1410 V.DC.	9.8590 V.DC.	0.5 V.DC.	Vérification sortie analogique

Conditions Environnementales: Température: 20 °C Humidité: 31 %RH

Type d'Étalonnage:

5F09106

Instrumentation Saint•Laurent Inc.
Accrédité ISO 17025

CLAS NRC·CNRC
CLAS 2010-02

SCC Accredited LAB
LAB Accrédité CCN
N°669

80 rue de la montagne
St-Joseph du lac
(Québec), J0N 1M0
Tél: (450) 473-6169
Fax: (450) 473-5207
Email: inst.st-laurent@videotron.ca

CERTIFICAT D'ÉTALONNAGE

No.Certificat: CE-EM-249 23/03/20

CLIENT	
Compagnie:	Services Polytests Inc
Adresse:	695 B rue Gaudette
	St-Jean-sur-Richelieu, Québec, J3B 7S7

SPÉCIFICATION DE CALIBRATION	
Procédure de service:	4IN9106
Précision requise:	+/- 0.25 "H2O
Fréquence d'étalonnage: (jours)	365

SPÉCIFICATION DE L'INSTRUMENT			
Type d'instrument:	Indicateur	**Type d'entrée:**	Pression
Manufacturier:	Dwyer	**Type de sortie:**	Voltage
No. Model:	MS-321-LCD	**Type de mesure:**	Pression
No. Série:	N/A	**Gamme:**	0 à 0.10 "H2O
Emplacement:	Banc de test	**No. Machine:**	N/A

Instrumentation St-Laurent Inc. Certifie que l'instrument ci-haut, rencontre ou excède les spécifications établies par le fabriquant. Le système qualité de l'entreprise est conforme aux exigences de la norme ISO 17025 et les étalons utilisés pour effectuer l'étalonnage est retraçable au CNRC et/ou au NIST. Le degré d'incertitude est basé sur un niveau de confiance=95%, K=2.

DATE D'ÉTALONNAGE / ÉMISSION DU CERTIFICAT	
Date d'Étalonnage:	23 Mars 2020
Date du prochain Étalonnage:	23 Mars 2021
Date d'émission du certificat:	23 Mars 2020

CONFORMITÉ D'ÉTALONNAGE	Avant	Après
Conforme:	X	X
Non Conforme:		

Le Service d'évaluation des laboratoires d'étalonnage (CLAS) du Conseil national de recherches du Canada (CNRC) a évalué et certifié la capacité d'étalonnage du laboratoire et la traçabilité au Système international d'unités (SI) ou à des étalons acceptables selon le CLAS. Le présent certificat d'étalonnage est délivré conformément aux conditions de certification du CLAS et aux conditions d'accréditation du Conseil canadien des normes (CCN). Numéro d'accréditation du CCN: # 669. Le CLAS et le CCN ne garantissent pas l'exactitude des étalonnages individuels effectués par les laboratoires accrédités.

Martin Langlais - Technicien

2020 MARS 30

5F09106

Instrumentation Saint•Laurent inc.
Accrédité ISO 17025

CLAS NRC·CNRC CLAS 2010-02

SCC Accredited LAB — LAB Accrédité CCN N°669

80 rue de la montagne
St-Joseph du lac
(Québec), J0N 1M0
Tél: (450) 473-6169
Fax: (450) 473-5207
Email: inst.st-laurent@videotron.ca

CERTIFICAT D'ÉTALONNAGE

No.Certificat: CE-EM-001 10/03/20

CLIENT	
Compagnie:	Services Polytests Inc
Adresse:	695 B rue Gaudette
	St-Jean-sur-Richelieu, Québec, J3B 7S7

SPÉCIFICATION DE CALIBRATION	
Procédure de service:	4IN9101
Précision requise:	+\- 2.0°C
Fréquence d'étalonnage: (jours)	365

SPÉCIFICATION DE L'INSTRUMENT			
Type d'instrument:	Indicateur	**Type d'entrée:**	Temp
Manufacturier:	Fluke	**Type de sortie:**	Digitale
No. Model:	52-II	**Type de mesure:**	Température
No. Série:	90630037	**Gamme:**	Divers
Emplacement:	N.A.	**No. Machine:**	N.A.

SPÉCIFICATION DE L'ÉTALON			
Étalon Utilisé:	Fluke 744	**No. du certificat d'étalonnage:**	2019007064
No. Série:	8139009	**Dernière date d'étalonnage:**	18-Oct-19
Certificat fait par:	Alpha Controls	**Prochaine date d'étalonnage:**	18-Oct-20
Commentaire:			

RÉSULTAT D'ÉTALONNAGE

Entrée Source	Valeur Donnée	Valeur Actuelle	Erreur de Déviation	Valeur après Étalonnage	Incertitude Élargie	Commentaire
0.0 °C	0.0 °C	-0.1 °C	-0.1 °C	-0.1 °C	1.0 °C	T1 typeJ
125.0 °C	125.0 °C	125.0 °C	0.0 °C	125.0 °C	1.0 °C	T1 typeJ
250.0 °C	250.0 °C	250.0 °C	0.0 °C	250.0 °C	1.0 °C	T1 typeJ
375.0 °C	375.0 °C	374.9 °C	-0.1 °C	374.9 °C	1.0 °C	T1 typeJ
500.0 °C	500.0 °C	500.0 °C	0.0 °C	500.0 °C	1.0 °C	T1 typeJ
0.0 °C	0.0 °C	0.0 °C	0.0 °C	0.0 °C	1.0 °C	T2 typeJ
125.0 °C	125.0 °C	125.0 °C	0.0 °C	125.0 °C	1.0 °C	T2 typeJ
250.0 °C	250.0 °C	250.0 °C	0.0 °C	250.0 °C	1.0 °C	T2 typeJ
375.0 °C	375.0 °C	375.0 °C	0.0 °C	375.0 °C	1.0 °C	T2 typeJ
500.0 °C	500.0 °C	500.0 °C	0.0 °C	500.0 °C	1.0 °C	T2 typeJ
0.0 °C	0.0 °C	0.2 °C	+0.2 °C	0.2 °C	1.0 °C	T1 typeK
125.0 °C	125.0 °C	125.2 °C	+0.2 °C	125.2 °C	1.0 °C	T1 typeK
250.0 °C	250.0 °C	250.1 °C	+0.1 °C	250.1 °C	1.0 °C	T1 typeK
375.0 °C	375.0 °C	375.2 °C	+0.2 °C	375.2 °C	1.0 °C	T1 typeK
500.0 °C	500.0 °C	500.1 °C	+0.1 °C	500.1 °C	1.0 °C	T1 typeK
0.0 °C	0.0 °C	0.2 °C	+0.2 °C	0.2 °C	1.0 °C	T2 typeK
125.0 °C	125.0 °C	125.2 °C	+0.2 °C	125.2 °C	1.0 °C	T2 typeK
250.0 °C	250.0 °C	250.2 °C	+0.2 °C	250.2 °C	1.0 °C	T2 typeK
375.0 °C	375.0 °C	375.2 °C	+0.2 °C	375.2 °C	1.0 °C	T2 typeK
500.0 °C	500.0 °C	500.1 °C	+0.1 °C	500.1 °C	1.0 °C	T2 typeK

Conditions Environnementales: Température: 20 °C Humidité: 23 %RH

Type d'Étalonnage:

Instrumentation Saint•Laurent inc.
Accrédité ISO 17025

CLAS NRC·CNRC
CLAS 2010-02

SCC Accredited LAB
LAB Accrédité CCN
N°669

80 rue de la montagne
St-Joseph du lac
(Québec), J0N 1M0
Tél: (450) 473-6169
Fax: (450) 473-5207
Email: inst.st-laurent@videotron.ca

CERTIFICAT D'ÉTALONNAGE

No.Certificat: CE-EM-001 10/03/20

CLIENT	
Compagnie:	Services Polytests Inc
Adresse:	695 B rue Gaudette
	St-Jean-sur-Richelieu, Québec, J3B 7S7

SPÉCIFICATION DE CALIBRATION	
Procédure de service:	4IN9101
Précision requise:	+\- 2.0°C
Fréquence d'étalonnage: (jours)	365

SPÉCIFICATION DE L'INSTRUMENT			
Type d'instrument:	Indicateur	**Type d'entrée:**	Temp
Manufacturier:	Fluke	**Type de sortie:**	Digitale
No. Model:	52-II	**Type de mesure:**	Température
No. Série:	90630037	**Gamme:**	Divers
Emplacement:	N.A.	**No. Machine:**	N.A.

Instrumentation St-Laurent Inc. Certifie que l'instrument ci-haut, rencontre ou excède les spécifications établies par le fabriquant. Le système qualité de l'entreprise est conforme aux exigences de la norme ISO 17025 et les étalons utilisés pour effectuer l'étalonnage est retraçable au CNRC et/ou au NIST. Le degré d'incertitude est basé sur un niveau de confiance=95%, K=2.

DATE D'ÉTALONNAGE / ÉMISSION DU CERTIFICAT	
Date d'Étalonnage:	10 Mars 2020
Date du prochain Étalonnage:	10 Mars 2021
Date d'émission du certificat:	10 Mars 2020

CONFORMITÉ D'ÉTALONNAGE	Avant	Après
Conforme:	X	X
Non Conforme:		

Le Service d'évaluation des laboratoires d'étalonnage (CLAS) du Conseil national de recherches du Canada (CNRC) a évalué et certifié la capacité d'étalonnage du laboratoire et la traçabilité au Système international d'unités (SI) ou à des étalons acceptables selon le CLAS. Le présent certificat d'étalonnage est délivré conformément aux conditions de certification du CLAS et aux conditions d'accréditation du Conseil canadien des normes (CCN). Numéro d'accréditation du CCN: # 669. Le CLAS et le CCN ne garantissent pas l'exactitude des étalonnages individuels effectués par les laboratoires accrédités.

Martin Langlais - Technicien

2020 MARS 30

5F09101

POLYCONTROLS
INTEGRATION • CALIBRATION • INSTRUMENTATION

CLAS NRC-CNRC CLAS 2009-02

SCC Accredited LAB Accredited CCN #655

CERTIFICAT D'ÉTALONNAGE # 13427

Date d'étalonnage : 2020-12-21
Date d'émission du certificat : 2020-12-22

Services Polytests
695 B Gaudette street
St-Jean-sur-Richelieu, Québec, Canada
J3B 7S7

Étalonnage d'un
Débitmètre volumétrique American Meter Company DTM-200A S/N : 99A274209

CONFORMITÉ AU PROGRAMME DE QUALITÉ

Tous les étalonnages sont effectués conformément au manuel d'assurance qualité de Polycontrols qui est conforme à la norme ISO/IEC 17025: 2017, à la norme ISO 9001 – 2015 ainsi qu'à toutes autres exigences de qualité définies dans la description d'achat des clients. Les résultats ne sont valides que pour l'objet soumis à l'essai ou à l'étalonnage. Si applicable, la règle de décision est décrite au certificat.

TRAÇABILITÉ

La traçabilité des étalons de débit au National Institute of Standards and Technology, NIST, est maintenue par les laboratoires de Fluke Corporation de Phoenix, Arizona et est conforme aux normes ISO/IEC 17025, ANSI/NCSL Z540-1-1994, ISO-10012-1, MIL-STD 45662A.

Le Service d'évaluation des laboratoires d'étalonnage (CLAS) du Conseil national de recherches du Canada (CNRC) a évalué et certifié la capacité d'étalonnage du laboratoire et la traçabilité au Système international d'unités (SI) ou à des étalons acceptables selon le CLAS. Le présent certificat d'étalonnage est délivré conformément aux conditions de certification du CLAS et aux conditions d'accréditation du Conseil canadien des normes (CCN). Le CLAS et le CCN ne garantissent pas l'exactitude des étalonnages individuels effectués par les laboratoires accrédités.

APTITUDE EN MATIÈRE DE MESURE ET D'ÉTALONNAGE - CMC

Les rendements métrologiques d'étalonnage ont une incertitude de ±0.2% de la lecture pour les mesures entre 5 SCCM à 10 SLPM, ±0.3% de la lecture pour les mesures entre 10 SLPM à 30 SLPM, ±0.2% de la lecture pour les mesures entre 30 SLPM à 3000 SLPM, ±0.3% de la lecture pour les mesures supérieures à 3000 SLPM jusqu'à 6000 SLPM et ±0.5% pour les mesures inférieures à 5 SCCM jusqu'à concurrence de 1 SCCM, équivalent air ou azote. Les incertitudes exprimées sont élargies avec un facteur d'élargissement k = 2, et ce, pour un niveau de confiance d'environ 95 %, dans l'hypothèse d'une distribution normale incluant la résolution de l'instrument. Le rapport d'incertitude des essais (RIE) de cet étalonnage respecte un ratio de 4:1 à moins d'indication contraire.

SOMMAIRE DES CONDITIONS DE L'INSTRUMENT EN TEST

Conditions initiales	En bon état
Travail Effectué	Étalonnage de l'instrument
	Lectures Initiales = Lectures finales, aucun ajustement
Résultats	Lectures finales dans les tolérances
Remarques	Fréquence d'étalonnage aux 12 mois

Bernard Poirier
Métrologiste

Responsable du laboratoire

2021-01-12

POLYCONTROLS
INTEGRATION • CALIBRATION • INSTRUMENTATION

CLAS NRC-CNRC CLAS 2009-02

SCC Accredited LAB #655

Certificat d'étalonnage # 13427

Numéro de série:	99A274209	Station de mesure:	3
Date d'étalonnage:	2020-12-21	Procédure:	POS-CAL-005
Identification de l'instrument:	EM-130	Règle de décision:	Méthode #3

Instrument de mesure de référence utilisé pour l'étalonnage final

Description	Modèle	# Série	Traçabilité	Date dû
Fluke molbloc_120 slpm	2E2-S	237	1500279836	2021-03-06
Fluke molbloc_30 slpm	3E4-VCR-V-Q	2403	1500285594	2021-06-10
Fluke molbox1	Molbox1	755	1500285062	2021-06-09
RTD Mist	M22	2208102	2020003043	2021-04-23
Module 44.5 PSI avec Baro 163671	Module 30	160659	2020003156	2021-04-28

Spécifications finales de l'appareil		Condition d'étalonnage	
Gaz	Air	Gaz	Air
Température d'opération		Température ambiante	21.5 °C
Pression à l'entrée		Pression ambiante	1005.15 mbar
Pression à la sortie		Orientation	Verticale
Température de référence		Élastomère	Viton
Pression de référence		Valve	Viton
Étendue d'échelle	0-200 ACFH		
Signaux Entrée/Sortie	-		
Alimentation			
Tolérance ±1 %O.R.			

Lectures finales

Débit du test ACFH	Instrument en test ft³	Valeurs mesurées Pression PSIA	Température °C	Référence ft³	Référence calculée ft³	Erreur calculée ft³	Tolérance acceptable ft³	Incertitude k = 2 ft³	TUR
40.6438	6.760	14.5928	21.49	6.710	6.766	-0.006	0.068	0.023	2.92
70.7640	11.790	14.6081	21.33	11.683	11.762	0.028	0.118	0.029	>4
164.5625	27.430	14.7148	21.28	27.473	27.453	-0.023	0.275	0.068	>4

Fc. : 1.0008876

2021. 01. 12

POLYCONTROLS
INTEGRATION • CALIBRATION • INSTRUMENTATION

CLAS NRC-CNRC CLAS 2009-02

SCC Accredited LAB #655

Certificat d'étalonnage # 13427

Numéro de série:	99A274209	Station de mesure:	3
Date d'étalonnage:	2020-12-21	Procédure:	POS-CAL-005
Identification de l'instrument:	EM-130	Règle de décision:	Méthode #3

Résultats finaux

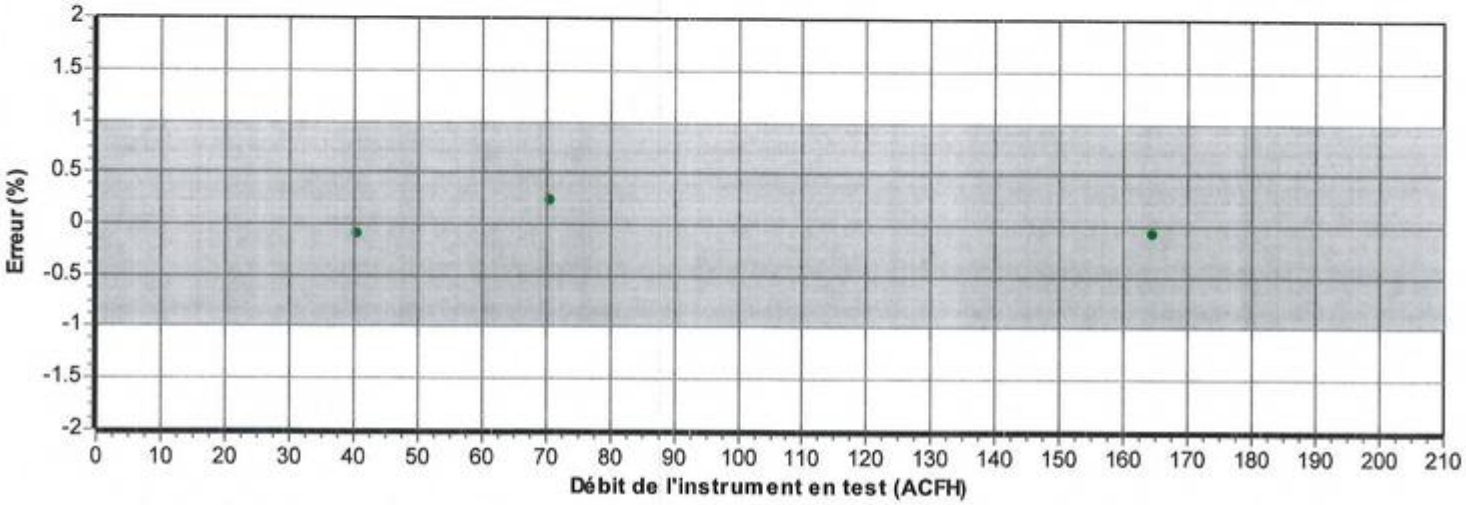

Voir l'annexe pour la règle de décision

2021-01-21

Annexe pour la règle de décision

Méthode 3 Statut de Conformité Non-binaire avec Bande de Garde en considérant l'incertitude de la mesure directement

Cette méthode tient compte d'une bande de garde pour définir l'intervalle acceptable et de rejet. La limite acceptable du résultat de la mesure est calculée selon la méthode mathématique suivante AL = TL – w et de rejet RL = TL + w, dont w = rU. Le multiple r de l'incertitude combiné élargie U peut être défini selon la table 1 section 5.2 du document ILAC G8 : 2019. L'incertitude de la mesure U est une incertitude combinée élargie ayant un niveau de confiance de 95% (k = 2). La règle de conformité non-binaire avec bande de garde est définie lorsqu'il y a quatre choix sur le statut de l'essai : dans la tolérance, acceptation conditionnelle, rejet conditionnel, et hors tolérance.

Les conformités de l'essai sont définies telles que :

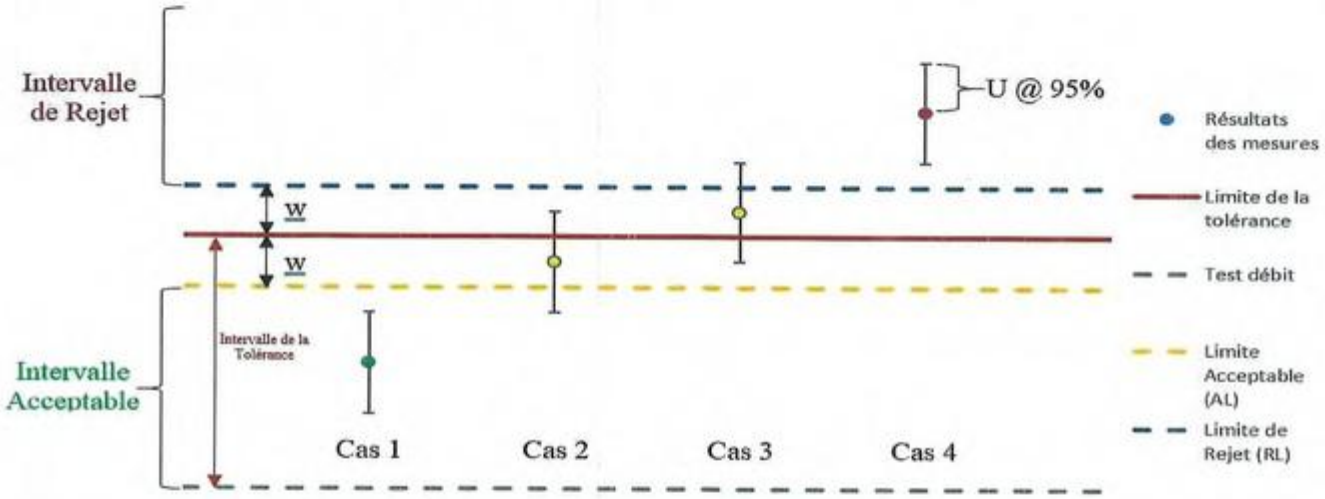

Explication de la règle Non-Binaire avec Bande de Garde

Cas 1** – Inférieur à la limite acceptable AL, **Statut : Dans les tolérances (In tolerance).

- Le résultat de la mesure est à l'intérieur de l'intervalle acceptable. Cependant, l'estimation du risque en assumant la probabilité d'une distribution normale d'être à l'extérieur de la limite de la tolérance est < 2.5%. L'incertitude de l'essai est directement prise en considération. Couleur verte.

Cas 2** – Inférieur à la limite de la tolérance TL, supérieur à la limite acceptable AL, **Statut : Dans les tolérances-Conditionnel.

- Le résultat de la mesure est à l'extérieur de l'intervalle acceptable mais inférieur à la limite de la tolérance. Cependant, la valeur observée est située dans la bande de garde w = TL-AL et le statut du résultat est conditionnel à l'évaluation du risque du client. L'incertitude de la mesure est directement prise en considération. Couleur jaune.

Cas 3** – Supérieur à la limite de la tolérance, inférieur à RL, **Statut : Hors tolérance-Conditionnel.

- Le résultat de la mesure est supérieur à la limite de la tolérance mais à l'extérieur de l'intervalle de rejet. Cependant, la valeur observée est située dans la bande de garde w = TL-RL et le statut du résultat est conditionnel à l'évaluation du risque du client. L'incertitude de la mesure est directement prise en considération. Couleur jaune.

Cas 4** – Supérieur à la limite de rejet RL, **Statut : Hors-tolérance (Out of tolerance).

- Le résultat de la mesure est à l'intérieur de l'intervalle de rejet. L'incertitude de l'essai est directement prise en considération. Couleur rouge.

Instrumentation Saint•Laurent inc.
Accrédité ISO 17025

CLAS NRC·CNRC
CLAS 2010-02

SCC Accredited LAB
LAB Accrédité CCN
N°669

80 rue de la montagne
St-Joseph du lac
(Québec), J0N 1M0
Tél: (450) 473-6169
Fax: (450) 473-5207
Email: inst.st-laurent@videotron.ca

CERTIFICAT D'ÉTALONNAGE

No.Certificat: CE-EM-136 12/03/20

CLIENT	
Compagnie:	Services Polytests Inc
Adresse:	695 B rue Gaudette
	St-Jean-sur-Richelieu, Québec, J3B 7S7

SPÉCIFICATION DE CALIBRATION	
Procédure de service:	ISL-004
Précision requise:	+\-2°C +\-3%RH
Fréquence d'étalonnage: (jours)	365

SPÉCIFICATION DE L'INSTRUMENT			
Type d'instrument:	Hygromètre	**Type d'entrée:**	Temp/%RH
Manufacturier:	Fluke	**Type de sortie:**	Digitale
No. Model:	971	**Type de mesure:**	Temp/humidité
No. Série:	10610850	**Gamme:**	5-95%RH -20a60°C
Emplacement:	N.A.	**No. Machine:**	N.A.

SPÉCIFICATION DE L'ÉTALON			
Étalon Utilisé:	Vaisala HM141-HMP46	**No. du certificat d'étalonnage:**	2019006062
No. Série:	V0820123-U4840010	**Dernière date d'étalonnage:**	12-Sep-19
Certificat fait par:	Alpha Controls	**Prochaine date d'étalonnage:**	12-Sep-20
Commentaire:			

RÉSULTAT D'ÉTALONNAGE

Entrée Source	Valeur Donnée	Valeur Actuelle	Erreur de Déviation	Valeur après Étalonnage	Incertitude Élargie	Commentaire
25.0 °C	25.0 °C	25.0 °C	0.0 °C	25.0 °C	1.0 °C	
40.0 °C	40.0 °C	40.2 °C	+0.2 °C	40.2 °C	1.0 °C	
30.0 %RH	30.0 %RH	31.4 %RH	+1.4 %RH	31.4 %RH	-- %RH	
55.0 %RH	55.0 %RH	55.6 %RH	+0.6 %RH	55.6 %RH	-- %RH	
75.0 %RH	75.0 %RH	75.4 %RH	+0.4 %RH	75.4 %RH	-- %RH	

Conditions Environnementales: Température: N.A. Humidité: N.A.

Type d'Étalonnage:

Instrumentation St-Laurent Inc. Certifie que l'instrument ci-haut, rencontre ou excède les spécifications établies par le fabriquant. Le système qualité de l'entreprise est conforme aux exigences de la norme ISO 17025 et les étalons utilisés pour effectuer l'étalonnage est retraçable au CNRC et/ou au NIST. Le degré d'incertitude est basé sur un niveau de confiance=95%, K=2.

DATE D'ÉTALONNAGE / ÉMISSION DU CERTIFICAT	
Date d'Étalonnage:	12 Mars 2020
Date du prochain Étalonnage:	12 Mars 2021
Date d'émission du certificat:	12 Mars 2020

CONFORMITÉ D'ÉTALONNAGE	Avant	Après
Conforme:	X	X
Non Conforme:		

Le Service d'évaluation des laboratoires d'étalonnage (CLAS) du Conseil national de recherches du Canada (CNRC) a évalué et certifié la capacité d'étalonnage du laboratoire et la traçabilité au Système international d'unités (SI) ou à des étalons acceptables selon le CLAS. Le présent certificat d'étalonnage est délivré conformément aux conditions de certification du CLAS et aux conditions d'accréditation du Conseil canadien des normes (CCN). Numéro d'accréditation du CCN: # 669. Le CLAS et le CCN ne garantissent pas l'exactitude des étalonnages individuels effectués par les laboratoires accrédités.

Martin Langlais - Technicien

2020 - MARS 30

CERTIFICATE OF NIST TRACEABLE CALIBRATION

Calibration Certificate No: 84629

Customer Information

Customer: Services Polytests, Inc.

Address : 695-B Gaudette
St-Jean-sur-richelieu
J3B 7S7

Customer PO #: 100519

Calibration Procedure Information

Procedure ID: GTP AIRVEL Revision #: 7 Revision Date: 10/17/2018

Calibration Standards Information

Graftel ID	Manufacturer	Model #	Description	CAL Due
10017	Hart Scientific/Burns	1502A/3925	PRT, Temperature	8/3/2021
10086	Furness Controls	FC0332	DP Transmitter	5/7/2021
10100	Graftel	n/a	Temperature	10/18/2022
10171	Furness	FC0332-2W	0 - .4" H2O	5/7/2021
10187	Vaisala	PTB210	Barometric Pressure Gauge	12/1/2021
10157	HOBO	UX100-011	RH/Temp logger	10/15/2020

Sensor Information

Manufacturer: Omega Description: Velometer Method Used: Pitot Tube

Model #: HHF143 Rated Accuracy: ± See Attachment Accuracy Specified By: Omega

Instrument ID#: EM153 Range: 40 to 5000 fpm Condition: Functional

Serial #: 1015949

Comments: Calibration Date: 08/27/2020 | Upper range limited to 5000fpm, 08-16-18.
Calibration Due: 08/27/2021

The calibrations within the certificate/report are traceable through NIST or another National Metrology Institute to the International System of Units (SI). The reported calibration uncertainty has a confidence level of 95% (k=2). A calibration uncertainty ratio of 4:1 was maintained unless required uncertainty is supported by analysis. Graftel Quality Assurance System complies with applicable requirements of ISO/IEC-17025-2017, ANSI/NCSL Z540-I-1994 and ISO 9001: 2008. All results contained within this certificate relate only to item(s) calibrated. This certificate shall not be reproduced except in full and with the written consent of Graftel. Acceptance Criteria per Simple Acceptance Rule: Measurement Uncertainty is not applied to the measured value when in/out of tolerance statement is made.

Performed By: Kevin Garcia Date: 8/27/2020
Calibration Technician

Approved By: Scott Pickett Date: 8/28/2020
Vice President, Lab Services

GRAFTEL 95 Chancellor Dr., Roselle, IL 60172 847.364.2600
www.graftel.com

ATTACHMENT TO CALIBRATION CERTIFICATE 84629
AS FOUND / AS LEFT DATA

Reading From Standard,	Lower Limit of Meter Reading,	Measured Reading From Meter,	Upper Limit of Meter Reading,	Error,	Measurement Uncertainty (k=2)	CMC (k=2)	STATUS
Actual Air Velocity							
fpm	fpm	fpm	fpm	fpm	fpm	fpm	STATUS
170	167	172	173	2	4	4	Pass
283	279	281	287	-2	6	6	Pass
466	460	464	472	-2	8	8	Pass
1483	1467	1485	1499	2	21	21	Pass
2568	2541	2569	2595	1	35	35	Pass
3500	3464	3500	3536	0	47	47	Pass
4531	4485	4537	4577	6	61	61	Pass
5007	4956	5011	5058	4	67	67	Pass

ERROR CHART

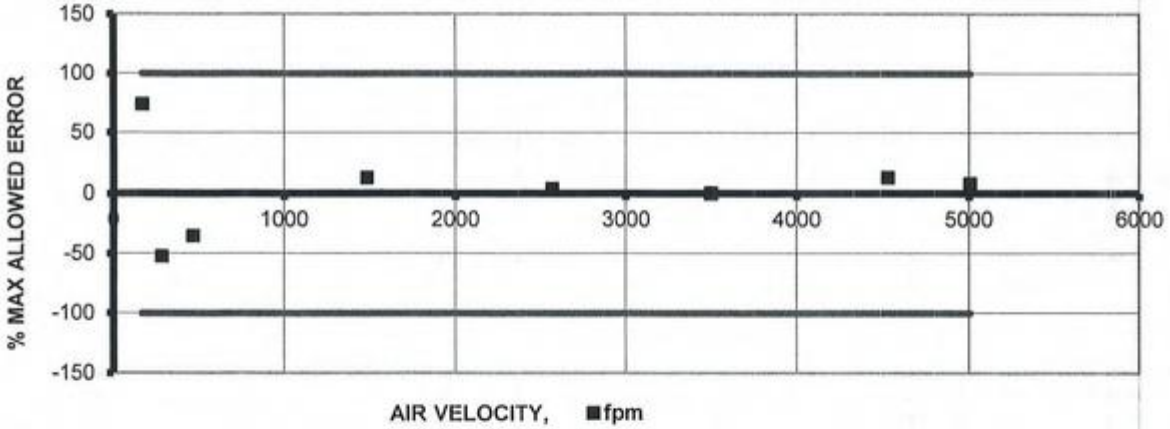

Instrument Specifications		
Test Fluid:	Air	
Lower Velocity Range:	40	fpm
Upper Velocity Range:	7800	fpm
Velocity Resolution:	1	
Velocity Accuracy:	+/-(1% Reading + 1 dgt)	
Laboratory Ambient Conditions		
Pressure:	14.26	psia
Humidity:	53.00	%RH
Temperature:	84.64	°F

GRAFTEL
FLOW - TEMPERATURE - HUMIDITY - PRESSURE - DESIGN - CONSULTING - ENGINEERING
NIST Traceable Calibration Data Sheet
WWW.GRAFTEL.COM
870 Cambridge Drive, Elk Grove Village, IL 60007 Phone: 847-364-2600 Fax: 847-364-2899

2020-08-31

Trescal
/ CALIBRATION SOLUTIONS TO IMPROVE YOUR PERFORMANCE /
/ LA METROLOGIE AU SERVICE DE VOTRE PERFORMANCE /
/ CALIBRATION SOLUTIONS TO IMPROVE YOUR PERFORMANCE /

4407 rue Charleroi, Montréal-Nord (Québec)
H1H 1T6 Canada
TEL.: (514) 329-3242 / 1 888 774-6665
FAX : (514) 329-3750
info.canada@trescal.com

Certificat d'Étalonnage / Certificate of Calibration

CLIENT :
SERVICES POLYTESTS INC.
695-B GAUDETTE
ST-JEAN-SUR-RICHELIEU, QUEBEC

Description:	STOPWATCH
Fabricant/ Manufacturer:	EXTECH
Modèle/ Model :	365510
No série / Serial no :	131636
# Inventaire / Asset # :	EM-175

CERTIFICAT No / Certificate No: 312464

PROCÉDURE / Procedure : TRESCAL - EXTECH_365510

Date étalonnage/ Calibration Performed : aaaa - mm - jj 2020-12-24

Echéance/ Due Date : 2021-12-24

Type de résultat / *Results type* :	As-Found = As-Left
Résultats d'essais / *Test results* :	Conforme / In Tolerance

Conditions de mesure / Measurement conditions

TEMPÉRATURE / Temp. : 23°C

HUMIDITÉ / Humidity : 36% RH

Usage restreint/ *Restricted use* : ☐

Réparation effectuée / *Repair performed* : ☐

Ajustement effectué / *Adjustment performed* : ☐

ÉTALONS UTILISÉS/ Standards Used:

Identification	Manuf.	Model	Description	Ser. #	Étalonné/ Cal.	Échéance/ Due
PR0313	H-P	53132A	UNIVERSAL COUNTER	3546A03142	2020-07-22	2021-07-22
PR0392	AGILENT	33250A	FUNCTION/ARBITRARY WAVEFORM GENERATOR	MY40008014	2019-06-12	2021-06-12

Les spécifications mentionnées comme limites de tolérances d'essai sont celles établies par le manufacturier, sauf indication contraire.
Test tolerance limits are based on manufacturers specifications unless stated otherwise.

NOTES :

2021.01.19

Technicien :
Technician

D. MARTEL

Le système qualité de la société est conforme aux exigences de la norme ISO 17025 et les étalons utilisés pour le processus d'étalonnage sont retraçables au SI par l'entremise du CNRC et/ou du NIST.
Our quality system complies with the requirements of ISO 17025 and the standards used for the calibration are traceable to SI through NRC and/or NIST.

COMPLIANT 17025

Trescal
| CALIBRATION SOLUTIONS TO IMPROVE YOUR PERFORMANCE |
| LA MÉTROLOGIE AU SERVICE DE VOTRE PERFORMANCE |

Certificat d'Étalonnage
Certificate of Calibration

312464

CLIENT / Customer : SERVICES POLYTESTS INC.

DESCRIPTION / Description : STOPWATCH

MANUFACTURIER / Manufacturer : EXTECH

MODÈLE / Model : 365510

DESCRIPTION Description	LIMITES Limits	LECTURES Readings	LIMITES Limits
	Min		Max
Temps écoulé, chronomètre sous test / Elapsed time on test stopwatch		**Comptes / Counts** Chronomètre/timer 138687	

Minutes	Seconds	1/100 sec
23	6	87

Total au compteur / Reference timer: 138685,5 comptes/counts

(Δt) Deviation (1/100sec): 1,50

Deviation Par jour/ Per day (%):	0,0011 %	* Secondes	Deviation 24hrs	* Secondes
Deviation Par jour/ Per day (sec):	**0,93 sec**	-3,00	**0,93**	3,00

* Tolérances basées sur une déviation maximale de 3 sec/jour
* Tolerances based on a 3 sec/day maximum deviation

Incertitude/ Uncertainty: ±37 ms

Lorsque fournies dans le rapport, les incertitudes de mesure sont des incertitudes élargies représentant un niveau de confiance d'approximativement 95% , obtenu en multipliant l'incertitude-type composée par un facteur de couverture de k=2.
When supplied in the report, the measurement uncertainties are expanded uncertainties representing a confidence level of approximately 95% , obtain by multiplying the combined standard uncertainty by a coverage factor of k=2.

Instrumentation Saint•Laurent Inc.

80 rue de la montagne
St-Joseph du lac
(Québec), J0N 1M0
Tél: (450) 473-6169
Fax: (450) 473-5207
Email: inst.st-laurent@videotron.ca

CERTIFICAT D'ÉTALONNAGE

No.Certificat: CE-EM-224 12/03/20

CLIENT	
Compagnie:	Services Polytests Inc
Adresse:	695 B rue Gaudette
	St-Jean-sur-Richelieu, Québec, J3B 7S7

SPÉCIFICATION DE CALIBRATION	
Procédure de service:	ISL-022
Précision requise:	+/- 1/32"
Fréquence d'étalonnage: (jours)	365

SPÉCIFICATION DE L'INSTRUMENT			
Type d'instrument:	Ruban à mesurer	**Type d'entrée:**	Mesure
Manufacturier:	Stanley	**Type de sortie:**	N/A
No. Model:	Leverlock 12'	**Type de mesure:**	Inch
No. Série:	N/A	**Gamme:**	0 à 12'
Emplacement:	Portable	**No. Machine:**	N/A

SPÉCIFICATION DE L'ÉTALON			
Étalon Utilisé:	Tape mesure-2	**No. du certificat d'étalonnage:**	2880456
No. Série:	20068976	**Dernière date d'étalonnage:**	18-Feb-20
Certificat fait par:	Starrett	**Prochaine date d'étalonnage:**	18-Feb-22
Commentaire:			

RÉSULTAT D'ÉTALONNAGE

Entrée Source	Valeur Donnée	Valeur Actuelle	Erreur de Déviation	Valeur après Étalonnage		Commentaire
1.00 "	1.00 "	1.00 "	0.00 "	1.00 "		
36.00 "	36.00 "	36.00 "	0.00 "	36.00 "		
72.00 "	72.00 "	72.00 "	0.00 "	72.00 "		
108.00 "	108.00 "	108.00 "	0.00 "	108.00 "		
132.00 "	132.00 "	132.00 "	0.00 "	132.00 "		

Conditions Environnementales: Température: 22 °C Humidité: 35 %RH

Commentaire:

Instrumentation St-Laurent Inc. Certifie que l'instrument ci-haut, rencontre ou excède les spécifications établies par le fabriquant. Les étalons utilisés pour effectuer l'étalonnage est retraçable au CNRC et/ou au NIST.

DATE D'ÉTALONNAGE / ÉMISSION DU CERTIFICAT	
Date d'Étalonnage:	12 Mars 2020
Date du prochain Étalonnage:	12 Mars 2021
Date d'émission du certificat:	12 Mars 2020

CONFORMITÉ D'ÉTALONNAGE	Avant	Après
Conforme:	X	X
Non Conforme:		

Martin Langlais - Technicien

2020 · MARS 30

22 Albiston Way
Auburn, ME 04210
800-292-6218
207-777-6218
Fax 207-777-6215
www.specair.com

Date: 08/14/2017

Certificate of Analysis

Customer:
VAC OXY

Results are reported in mole percent, unless otherwise indicated. Mixes are prepared via partial pressure methods, or gravimetrically, using high load high sensitivity electronic scales. Prior to use, scales are verified for accuracy using applicable NIST traceable weights; analyses are calibrated against reference materials traceable to NIST weights and/or NIST gas reference materials.

Cylinder Serial #: 809277 **Cylinder Size:** K **CGA Connection:** 350 **Fill Pressure:** 1450 PSI

Analysis: Certified Standard **Lot #:** 4722621

Component(s):	Requested Concentration(s):	Actual Concentration(s):
Carbon Monoxide	3%	3.0%
Carbon Dioxide	18%	18.0%
Oxygen	2%	2.0%
Nitrogen	BALANCE	BALANCE

Expiration Date: 08/2020

Approved By:

Tom Bosse

EM-275

5. sept 2017

22 Albiston Way
Auburn, ME 04210
800-292-6218
207-777-6218
Fax 207-777-6215
www.specair.com

Date: 08/14/2017

Certificate of Analysis

Customer:
VAC OXY

Results are reported in mole percent, unless otherwise indicated. Mixes are prepared via partial pressure methods, or gravimetrically, using high load high sensitivity electronic scales. Prior to use, scales are verified for accuracy using applicable NIST traceable weights; analyses are calibrated against reference materials traceable to NIST weights and/or NIST gas reference materials.

Cylinder Serial #: K3886 **Cylinder Size:** K **CGA Connection:** 590 **Fill Pressure:** 1450 PSI

Analysis: Certified Standard **Lot #:** 4722622

Component(s):	Requested Concentration(s):	Actual Concentration(s):
Carbon Monoxide	1%	1.0%
Carbon Dioxide	10%	10.0%
Oxygen	10%	10.0%
Nitrogen	BALANCE	BALANCE

Expiration Date: 08/2020

Approved By:

Tom Bosse

Tom Bosse

5 sept 2017

EM. 276

Instrumentation Saint•Laurent inc.
Accrédité ISO 17025

CLAS NRC·CNRC CLAS 2010-02

SCC Accredited LAB Accrédité CCN N°669

80 rue de la montagne
St-Joseph du lac
(Québec), J0N 1M0
Tél: (450) 473-6169
Fax: (450) 473-5207
Email: inst.st-laurent@videotron.ca

CERTIFICAT D'ÉTALONNAGE

No.Certificat: CE-EM-308 18/11/20

CLIENT	
Compagnie:	Services Polytests Inc
Adresse:	695 B rue Gaudette
	St-Jean-sur-Richelieu, Québec, J3B 7S7

SPÉCIFICATION DE CALIBRATION	
Procédure de service:	4IN9102
Précision requise:	+/- 5.0°C
Fréquence d'étalonnage: (jours)	365

SPÉCIFICATION DE L'INSTRUMENT			
Type d'instrument:	Thermocouple Type "K"	**Type d'entrée:**	Temperature
Manufacturier:	Omega	**Type de sortie:**	mV
No. Model:	Type K	**Type de mesure:**	Température
No. Série:	N.A.	**Gamme:**	Type K
Emplacement:	N.A.	**No. Machine:**	N.A.

SPÉCIFICATION DE L'ÉTALON			
Étalon Utilisé:	Probe etalon Hart	**No. du certificat d'étalonnage:**	2020000933
No. Série:	A26317/00361	**Dernière date d'étalonnage:**	11-Feb-20
Certificat fait par:	Alpha Control	**Prochaine date d'étalonnage:**	11-Feb-21
Commentaire:			

SPÉCIFICATION DE L'ÉTALON			
Étalon Utilisé:	Hart Scientific 2566	**No. du certificat d'étalonnage:**	2020003757
No. Série:	A7A799	**Dernière date d'étalonnage:**	20-May-20
Certificat fait par:	Alpha Controls	**Prochaine date d'étalonnage:**	20-May-21
Commentaire: Meet the requirement as Secondary Standard Instrument (AMS2750E)			

SPÉCIFICATION DE L'ÉTALON			
Étalon Utilisé:	TC-BA2537	**No. du certificat d'étalonnage:**	BA2537
No. Série:		**Dernière date d'étalonnage:**	28-Apr-20
Certificat fait par:	GeoCorp	**Prochaine date d'étalonnage:**	28-Apr-21
Commentaire:			

RÉSULTAT D'ÉTALONNAGE

Entrée Source	Valeur Donnée	Valeur Actuelle	Erreur de Déviation	Valeur après Étalonnage	Incertitude Élargie	Commentaire
100.0 °C	100.0 °C	99.9 °C	-0.1 °C	99.9 °C	2 °C	Conforme
650.0 °C	650.0 °C	650.7 °C	+0.7 °C	650.7 °C	2 °C	Conforme
925.0 °C	925.0 °C	925.9 °C	+0.9 °C	925.9 °C	2 °C	Conforme

Conditions Environnementales: Température: 22 °C Humidité: 48 %RH

Type d'Étalonnage:

2020-11-24

5F09102

Instrumentation Saint•Laurent inc.
Accrédité ISO 17025

CLAS NRC·CNRC
CLAS 2010-02

SCC Accredited LAB
LAB Accrédité CCN
N°669

80 rue de la montagne
St-Joseph du lac
(Québec), J0N 1M0
Tél: (450) 473-6169
Fax: (450) 473-5207
Email: inst.st-laurent@videotron.ca

CERTIFICAT D'ÉTALONNAGE

No.Certificat: CE-EM-308 18/11/20

CLIENT	
Compagnie:	Services Polytests Inc
Adresse:	695 B rue Gaudette
	St-Jean-sur-Richelieu, Québec, J3B 7S7

SPÉCIFICATION DE CALIBRATION	
Procédure de service:	4IN9102
Précision requise:	+/- 5.0°C
Fréquence d'étalonnage: (jours)	365

SPÉCIFICATION DE L'INSTRUMENT			
Type d'instrument:	Thermocouple Type "K"	**Type d'entrée:**	Temperature
Manufacturier:	Omega	**Type de sortie:**	mV
No. Model:	Type K	**Type de mesure:**	Température
No. Série:	N.A.	**Gamme:**	Type K
Emplacement:	N.A.	**No. Machine:**	N.A.

Instrumentation St-Laurent Inc. Certifie que l'instrument ci-haut, rencontre ou excède les spécifications établies par le fabriquant. Le système qualité de l'entreprise est conforme aux exigences de la norme ISO 17025 et les étalons utilisés pour effectuer l'étalonnage est retraçable au CNRC et/ou au NIST. Le degré d'incertitude est basé sur un niveau de confiance=95%, K=2.

DATE D'ÉTALONNAGE / ÉMISSION DU CERTIFICAT	
Date d'Étalonnage:	18 Novembre 2020
Date du prochain Étalonnage:	18 Novembre 2021
Date d'émission du certificat:	18 Novembre 2020

CONFORMITÉ D'ÉTALONNAGE	Avant	Après
Conforme:	X	X
Non Conforme:		

Le Service d'évaluation des laboratoires d'étalonnage (CLAS) du Conseil national de recherches du Canada (CNRC) a évalué et certifié la capacité d'étalonnage du laboratoire et la traçabilité au Système international d'unités (SI) ou à des étalons acceptables selon le CLAS. Le présent certificat d'étalonnage est délivré conformément aux conditions de certification du CLAS et aux conditions d'accréditation du Conseil canadien des normes (CCN). Numéro d'accréditation du CCN: # 669. Le CLAS et le CCN ne garantissent pas l'exactitude des étalonnages individuels effectués par les laboratoires accrédités.

Martin Langlais - Technicien

APPENDIX 4: Unit pre burn

Aging Data for Jotul F-35 Woodstove

Testing from February 2, 2021 – February 8, 2021 For Jotul F-35 Woodstove

Testing Performed by Derik K. Andors

Temperature taken in the stack at 8 feet, every hour.

Test data was taken during EPA-ASTM emissions testing.

Cold start high followed by low.

Derik K. Andors
Dragonfyre LLC
64 West Shore Road
South Hero, VT 05486
802-343-4116

	Stove Model: F-35 Jotul			Date of Test: 2/2/21		
	Time	Lb's of wood added	Stack Temp	# of pieces	Average Mositure	Accumulated time
1	10:15	7.6	65	Kindling	18%	0
2	10:30	—	325			15min
3	11:01	15.8	515	5	21%	45min
4	12:00	—	479			1:45 min
5	12:55	19.0	380	5	22%	2:40
6	2:00	—	374			3:45
7	3:00	—	295			4:45
8	4:00	—	268			5:45
9	4:57	—	247			6:43
10	6:00	—	235			7:45
11	6:58		225			8:43
12	6:00	—	221			9:45
13						
14						
15						
16						
17						
18						
19						
20						

	Stove Model: F-35 Jotul			Date of Test: 2/3/21		
	Time	Lb's of wood added	Stack Temp	# of pieces	Average Mositure	Accumulated time
1	10:30	7.5	65	Kindling	17%	0
2	10:35	—	348			5 min
3	10:50	15.7	590	5	20.5	20 min
4	11:30	—	607	—	—	60 min
5	12:00	—	518	—	—	90 min
6	12:50	—	389			2hr 20 min
7	1:00	18.3	324	5	21.5	3hr 30 min
8	2:00	—	402			4:30
9	3:00	—	352			5:30
10	4:00	—	269			6:30
11	5:00	—	205			7:30
12	6:00	—	199			8:30
13	7:00	—	193			9:30
14	8:00	—	177			10:00
15						
16						
17						
18						
19						
20						

	Stove Model: F-35 Jotul			Date of Test: Feb 4th 2021		
	Time	Lb's of wood added	Stack Temp	# of pieces	Average Mositure	Accumulated time
1	9:54	7.8	65	Kindling	10-20	0
2	10:00	—	202	—	—	6 min
3	10:30	15.4	560	5	18-20	36 min
4	11:15	—	625	—	—	1:20
5	12:15		426	—	—	2:20
6	12:30	18.4	395	5	22%	2:30
7	1:30	—	404	—	—	3:30
8	2:30	—	345			4:30
9	3:30	—	283	—	—	5:30
10	4:30	—	215			6:30
11	5:30	—	201	—	—	7:30
12	6:30	—	191	—	—	8:30
13	7:30	—	174	—	—	9:30
14						
15						
16						
17						
18						
19						
20						

	Stove Model: F-35 Total			Date of Test: Feb 5th		
	Time	Lb's of wood added	Stack Temp	# of pieces	Average Mositure	Accumulated time
1	11:30	7.9	68	Kindling	18-20	0
2	12:00	15.7	491	5	20	30 min
3	12:41	—	569	—	—	1:10 min
4	1:30	—	483	—	—	2 hrs
5	2:30	18.4	372	5	21%	3 hrs
6	3:30	—	445	—	—	4 hrs
7	4:30		269			5 hrs.
8	5:30		234			6 hrs.
9	6:30		213			7.
10	7:30		197			8 hrs
11	8:30		191	—	—	9 hrs
12						
13						
14						
15						
16						
17						
18						
19						
20						

	Stove Model: F-35 Jotul			Date of Test: Feb 7 2021		
	Time	Lb's of wood added	Stack Temp	# of pieces	Average Mositure	Accumulated time
1	8:15	7.9	73	Kindling	18-20	0
2	9:00	15.2	478	5	21	:45
3	10:00	—	479	—	—	1:45
4	10:30	18.6	468	5	21.5	2:15
5	11:30	—	408	—	—	3:15
6	12:30		364	—	—	4:15
7	12:50		323			4:35
8	1:30		236			5:45
9	2:30		205			6:15
10	3:30		191			7:15
11	4:30		189			8:15
12	5:30		177			9:15
13						
14						
15						
16						
17						
18						
19						
20						

	Stove Model: F-35			Date of Test: Feb 8		
	Time	Lb's of wood added	Stack Temp	# of pieces	Average Mositure	Accumulated time
1	11:00	8.2	72	Kindling	18-20	0
2	11:30	15.0	525	5	19-20	:30min
3	12:30	—	545	—	—	1:30
4	1:30	—	382			2:30
5	1:45	19.1	375	5	22	2:45
6	2:45		421	—	—	3:45
7	3:45		360	—	—	4:45
8	4:45		242			5:45
9	5:40		225			6:40
10	6:45		210			7:45
11	7:45		201			8:45
12						
13						
14						
15						
16						
17						
18						
19						
20						

APPENDIX 5: Participants

Danick Power ing.
v-p operation
Services Polytests inc.
450.741.3636
www.polytests.com

Maxime Martin
Technicien
Services Polytests inc.
450.741.3636
www.polytests.com

APPENDIX 6: Drawings and specifications

APPENDIX 7: Operator's manual

Jøtul F 35
Wood Burning Stove

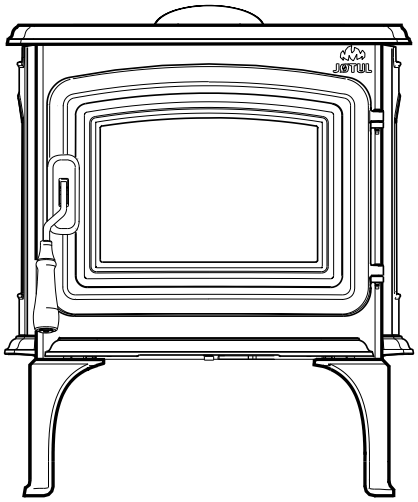

Jøtul F 35

Installation and Operating Instructions

- **The Jøtul F 35 heater is listed to burn solid wood only.**
  Do not burn any other fuels.
- **Read this entire manual before you install and use this appliance.**
- **Save these instructions for future reference and make them available to anyone using or servicing the fireplace insert.**
- **This wood heater requires periodic inspection and repair for proper operation. See this manual for specific maintenance information. It is against federal regulations to operate this wood heater in a manner inconsistent with the operating instructions in this owner's manual.**

This heater meets the 2020 U.S. Environmental Protection Agency's emission limits for wood heaters manufactured after May 15, 2020.

Une version française de ce manuel est disponible au téléchargement sur www.jotul.ca

JØTUL®

Table of Contents

Accessories 2

Standards / Codes 3

Combustion Specifications 3

Safety Notices 4

1.0 Installation
1.1. Unpack the Stove 5
1.2 Top Exit Flue Adaptor Orientation 5
1.3 Short Leg Installation 5
1.4 Floor Bracket Installation 5
1.5 Rear Exit Flue Collar Orientation 6
1.6 Chimney Connector 6

2.0 Chimney Requirements
2.1 Masonry Chimneys 7
2.2 Prefabricated Chimneys 7
2.3 Chimney Height 8
2.4 Wall Pass-Throughs 8

3.0 Chimney Connection
3.1 Masonry Chimneys 9
3.2 Hearthmount into a Masonry Fireplace 9
3.3 Prefabricated Chimneys 10
3.4 Mobile Home Requirements 10

4.0 Clearances to Combustibles
4.1 Floor Protection 11
4.2 Clearances to Walls and Ceilings 11
4.3 Using Shields to Reduce Clearances 12
4.4 Alcove Installation 12
4.5 Fireplace Clearances, Mantel and Trim 12
4.6 Clearance Diagrams 13

5.0 Operation
5.1 Combustion Efficiency 14
5.2 CO Emissions 14
5.3 Wood Fuel and Performance 14
5.4 F 35 Functionality 15
5.5 Air Control / Blower Settings 15
5.6 Controling the Fire 15
5.7 Break-in Procedure 16
5.8 Starting and Maintaining a Fire 16
5.9 Adding Fuel 17
5.10 Creosote and the Need for Removal 17
5.11 Ash Removal 17

6.0 Maintenance
6.1 Door Latch 18
6.2 Glass Care 18
6.3 General Care 18
6.4 Gasket Replacement 19
6.5 Glass Replacement 19
6.6 Chimney System 20
6.7 Firebricks 20
6.8 Secondary Manifold Maintenance 20

7.0 Optional Accessories
7.1 Short Leg Installation 21
7.2 Outside Air Kit 21
7.3 Mobile Home Floor Bracket 21

8.0 Appendix
8.1 Start-Up and Refueling 22

9.0 Illustrated Part List 24

10.0 Warranty Statement 27

Jøtul F 35 Accessories

Stove-Top Thermometer - #5002
We recommend the use of a magnetic stove-top thermometer to monitor the surface temperature of the stove.

The optimum surface temperature range for the most efficient performance is between 400^0 F - 700^0 F (205^0 C - 316^0 C).

Short Leg Kit - #157636
This kit includes four, 4 1/4" steel legs which allow stove installation into a fireplace opening height as low as 25 1/2". ***Approved only for code-approved, masonry fireplace hearth mount installation. Not approved for use in mobile homes. See page 21.***

Mobile Home Floor Bracket Kit - #157321
This kit includes two brackets used to fulfill the mobile home requirement that the stove be secured directly to the floor. See installation instructions on page 21.

Outside Air Kit - #157637
This kit includes an adaptor collar that allows connection between an exterior wall air inlet through a duct directly to the bottom of the stove fuel bed.
See installation instructions on page 21.

Standards

The Jøtul F 35 non-catalytic heater has been tested and listed to:
U.S: ANSI/UL 1482-2011
Canada: CAN/ULC-S627-00 and ULC-S628-93

Certified Safety Tests performed by:
ITS, Intertek Testing Services
Middleton, WI

Manufactured by:
Jøtul North America
55 Hutcherson Drive
Gorham, Maine 04038-2644

Check Building Codes

When installing, operating and maintaining your Jøtul F 35 woodstove, follow the guidelines presented in these instructions, and make them available to anyone using or servicing the stove.

Your city, town, county or province may require a building permit to install a solid fuel burning appliance.

In the U.S., the National Fire Protection Association's Code, NFPA 211, *Standards for Chimneys, Fireplaces, Vents and Solid Fuel Burning Appliances*, or similar regulations, may apply to the installation of a solid fuel burning appliance in your area.

In Canada, the guideline is established by the CSA Standard, CAN/CSA-B365-M93, *Installation Code for Solid-Fuel-Burning Appliances and Equipment.*

Always consult your local building inspector or authority having jurisdiction to determine what regulations apply in your area.

The Jøtul F 35 is approved for use in mobile homes. Install in accordance with 24 CFR, Part 3280 (HUD). Follow the instructions in this manual.

⚠ WARNING !
THIS WOOD HEATER HAS A MANUFACTURER-SET MINIMUM LOW BURN RATE THAT MUST NOT BE ALTERED. IT IS AGAINST FEDERAL REGULATIONS TO ALTER THIS SETTING OR OTHERWISE OPERATE THIS WOOD HEATER IN A MANNER INCONSISTENT WITH OPERATING INSTRUCTIONS IN THIS MANUAL.

Combustion Specifications

Heat Output Range:[1]
Heating Capacity:[2]
Maximum Burn Time:[2]
EPA Efficiency:[3]
CO Emissions:[4]
Pariculate Emissions:[5]
Fuel: 16" Logs (40 cm) Front to Back

EPA Info Needed

See the Operation section of this manual for important information regarding the safe, proper, and most efficient operation of your stove.

1 ***Heat Output Range*** results are determined during specific emissions tests established by the EPA.

2 ***Heating Capacity and Maximum Burn Time*** will vary depending on design of home, climate, wood type and operation

3 ***EPA Validated Efficiency:***
High Heat Value (HHV) and Low Heat Value (LHV) efficiencies are determined per the CSA B415.1-10 test method. The difference between the HHV and LHV is in how the energy in the exhaust gas water vapor is accounted.

LHV efficiency assumes all the water vapor in combustion gas was condensed and the heat from such was recovered and transferred to the dwelling. HHV calculations do not assume all water vapor is condensed, therefore the HHV value is less than the LHV value.

4 ***Carbon Monoxide Emissions*** rate results from Test Method CSA B415.1-10.

5 ***Particulate Emissions*** rate is obtained using EPA Test Methods:
ALT-125 (Cordwood Fuel)
ASTM E2515-11
ASTM E3053-17

NATIONAL FIREPLACE INSTITUTE NFI CERTIFIED www.nficertified.org

We suggest that our woodburning hearth products be installed and serviced by professionals who are certified in the U.S. by the National Fireplace Institute® (NFI) as NFI Woodburning Specialists or who are certified in Canada by Wood Energy Technical Training (WETT).

Wood Energy Technical Training www.wettinc.ca

Safety Notices

- **BURN SOLID, NATURAL WOOD FUEL ONLY. DO NOT BURN ANY OTHER FUEL.**
- **DO NOT USE CHEMICALS OR FLUIDS TO START A FIRE. DO NOT BURN GARBAGE OR FLAMMABLE FUELS.**
- **DO NOT USE A GRATE OR ELEVATE THE FIRE. BUILD THE FIRE DIRECTLY ON THE HEARTH.**
- **IF THIS ROOM HEATER IS NOT PROPERLY INSTALLED, A HOUSE FIRE MAY RESULT. TO REDUCE THE RISK OF FIRE, FOLLOW THE INSTRUCTIONS IN THIS MANUAL. FAILURE TO FOLLOW THESE INSTRUCTIONS MAY RESULT IN PROPERTY DAMAGE, BODILY INJURY, OR LOSS OF LIFE.**
- **CONTACT LOCAL BUILDING OR FIRE OFFICIALS ABOUT RESTRICTIONS AND INSTALLATION INSPECTION REQUIREMENTS IN YOUR AREA.**
- **ANY EXISTING CHIMNEY SYSTEM MUST BE INSPECTED BEFORE INSTALLATION OF THIS APPLIANCE.**
- **DO NOT CONNECT THIS STOVE TO ANY AIR DISTRIBUTION DUCT OR SYSTEM.**
- **EXTREMELY HOT WHILE IN OPERATION! KEEP CHILDREN, CLOTHING, AND FURNITURE AWAY. CONTACT WILL CAUSE SKIN BURNS. USE A CHILD GUARD SCREEN TO PREVENT ACCIDENTAL CONTACT BY SMALL CHILDREN.**
- **INSTALL SMOKE DETECTORS IN THE LIVING AREA AND BEDROOMS OF YOUR HOME. TEST THEM REGULARLY AND INSTALL FRESH BATTERIES TWICE ANNUALLY.**

  WHEN INSTALLED IN THE SAME ROOM AS THE STOVE, A SMOKE OR CARBON MONOXIDE DETECTOR SHOULD BE LOCATED AS FAR FROM THE STOVE AS POSSIBLE TO PREVENT THE ALARM SOUNDING WHEN ADDING FUEL.
- **Avoid creating a low pressure condition in the room where the stove is operating. Be aware that operation of an exhaust fan or clothes dryer can create a low pressure area and consequently promote flow reversal through the stove and chimney system. In some cases, the optional Outside Air Kit #157637 can be used to alleviate this condition. The chimney and building, however, always work together as a system - provision of outside air, directly or indirectly to an atmospherically vented appliance will not guarantee proper chimney performance. Consult your local Jøtul authorized dealer regarding specific installation/performance issues.**
- **Jøtul strongly recommends that this stove be installed by a professional solid fuel technician, or that you consult one if you do the work yourself. Also, consult your insurance company regarding any other specific requirements.**

Recommended Installation Tools

- Measuring Tape
- Phillips screwdriver
- 10 mm open-end or socket wrench
- Work Gloves
- Safety Glasses
- 4 mm hex key
- 13 mm open-end or socket wrench

PLEASE NOTE:

IT IS NORMAL FOR SMOKE AND ODOR TO OCCUR DURING THE INITIAL STAGES OF OPERATION, DEPENDING UPON TEMPERATURES GENERATED OVER TIME. THIS "CURING" CONDITION CAN BE ALLEVIATED BY PROMOTING FRESH AIR CIRCULATION WITHIN THE IMMEDIATE VICINITY OF THE APPLIANCE.

1.0 Installation

If this solid fuel room heater is not properly installed, a house fire may result. For your safety, follow the installation directions. Contact the local building or fire officials about restrictions and installation inspection requirements in your area.

Your local officials have final authority in determining if a proposed installation is acceptable. Any requirement by the local authority having jurisdiction that is not specifically addressed in this manual, defaults to NFPA 211, and local codes in the U.S. or in Canada, CAN/CSA-B365-M and local codes.

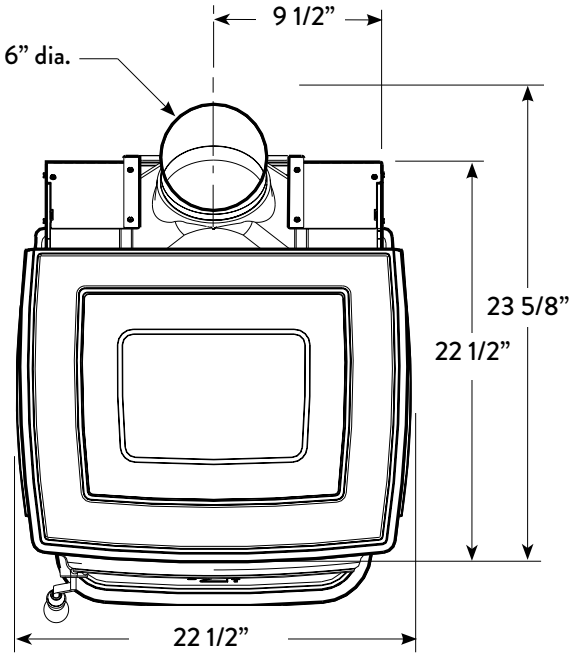

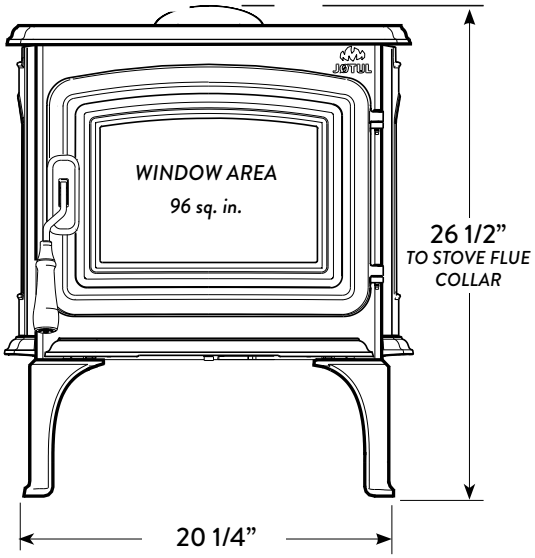

Figure 1. F 35 dimensional views.

1.1 Unpack the Stove

Inspect the stove for damage. Contact your dealer immediately if any damage is found. Do not install the stove if any damage is evident.

Contents:

- Miscellaneous Hardware

NOTE: The integral Rear Shroud acts as a heat shield. There is no accessory stove heat shield.

DO NOT REMOVE THE REAR HEAT SHIELD

1.2 Short Leg Kit 157636 Installation

This set of four steel legs reduces stove height by 3 1/4 inches allowing installation into fireplaces having a low lintel. See fig. 22, page 21. **Approved for use only in a code-approved, masonry fireplace.**

1.3 Floor Bracket Kit 157321

Install this kit to conform to Mobile Home code woodstove installation requirements.See fig. 24, page 21.

1.4 Flue Outlet Orientation

The cast iron Flue Collar is oriented to exit at 45°.
Change orientation to Rear Exit or Top Exit by positioning a 45° sheet metal adaptor as desired.

1. Secure 45° adaptor or chimney connector to the cast flue collar holes provided

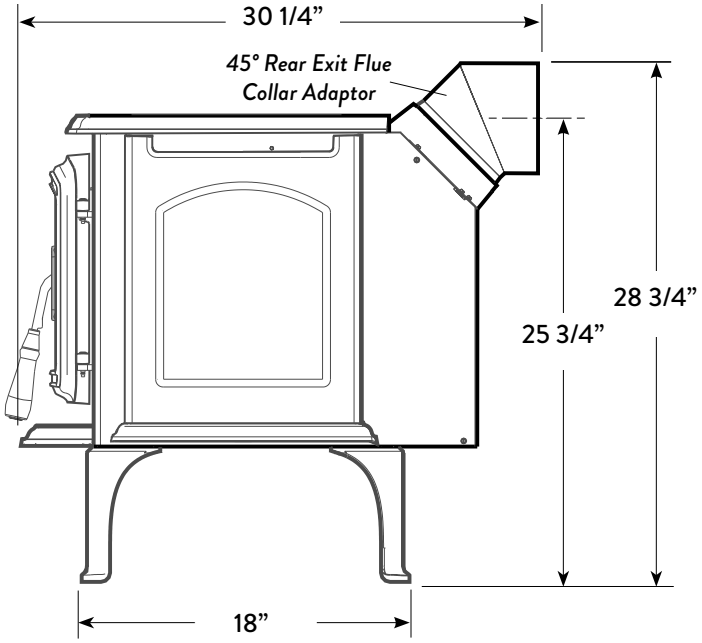

Use Short Leg Kit #157636 to reduce stove height by 3 1/4”. Hearthmount installation only.

1.6 Chimney Connector

Use 6" single wall or listed 6" double-wall stovepipe to connect the stove to the chimney. Single wall stovepipe must be black steel or stainless steel and have a minimum thickness of 24 gauge. Do not use aluminum or galvanized steel pipe for chimney connection - these materials are not suitable for use with solid fuel. Attach the flue collar to the chimney connection using 2 self-drilling screws found in the miscellaneous kit.

Follow these guidelines:

- Do not use chimney connector as a chimney. It is intended only as a connection device to a code approved chimney.
- Each connector section must be oriented with the male (crimped) end pointing toward the stove. See fig. 3.
- Secure all connector joints with three sheet metal screws.
- For the best performance, the chimney connector should be as short and direct as possible, including no more than two 90° elbows.
- **The maximum vertical run of single wall stovepipe should not exceed 10 ft.**
- **The maximum horizontal run should not exceed 3 ft. with a 1/4" rise per foot.** Under no circumstance should horizontal pipe be installed slanting down toward the chimney.
- No part of the chimney connector may pass through an attic or roof space, closet or other concealed space, or through a floor or ceiling. All sections of the chimney connectors must be accessible for cleaning. Where passage through a wall or partition of combustible construction is desired, the installation must conform with NFPA 211 or CAN/CSA-B365, and is also addressed in this manual.
- **Do not connect this stove to a chimney flue serving another appliance.**

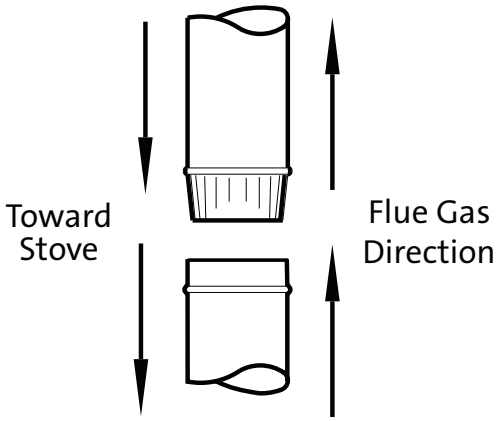

Figure 3. Chimney connector orientation.

2.0 Chimney Requirements

There are two types of approved chimneys:

1. A code-approved masonry chimney with a ceramic tile or listed steel flue liner.
2. A prefabricated chimney complying with the requirements for Type HT (2100°F) chimneys per UL 103 or ULC S629.

An NFPA 211 Level 1 chimney inspection should be performed prior to installation. Depending on specific circumstances and the outcome of the Level 1 inspection it may be determined that a Level 2 or 3 inspection is also necessary.

The chimney size should not be less than the cross-sectional area of the flue collar, and not more than three times greater than the cross-sectional area of the flue collar. If the chimney flue is outdoors, its cross-sectional area may not exceed two times greater than the stove flue collar. See also Sect. 3.2.

When selecting a chimney type and the location for the chimney in the house, keep this in mind: **It is the chimney that makes the stove work - not the stove that makes the chimney work.** This is because a chimney actually creates a suction, called "draft" which pulls air through the stove.

Several factors affect draft: chimney height, cross-sectional area (size), and temperature of the chimney, as well as the proximity of surrounding trees or buildings.

A short exterior masonry chimney will give the poorest performance because it will be difficult to warm the flue and sustain the temperatures necessary to maintain draft strength. In extremely cold climates, it may be necessary to reline the chimney or extend the height to help establish draft.

A tall, interior masonry chimney is easier to keep warm and will perform well under a variety of weather and environmental conditions.

The following guidelines give the necessary chimney requirements based on the national code (ANSI-NFPA 211 for the US. And CSA CAN-B365 for Canada). However, many local codes differ from the national code to take into account climate, altitude, or other factors. Your local building inspector is the final approving authority. Consult them prior to installation.

Do not connect the stove to any air distribution duct or system.

2.1 Masonry Chimneys

Follow these guidelines when installing the Jøtul F 35 into a masonry chimney:

- The masonry chimney must have a fireclay liner or equivalent, with a minimum thickness of 5/8" (14 mm) and must be installed with refractory mortar. There must be at least 1/2"air space between the flue liner and chimney wall.
- The fireclay flue liner must have a nominal size of 8" X 8", and should not be larger than 8"X 12". A round fireclay liner must have a minimum inside diameter of 6" and maximum inside diameter of 8".

A larger chimney should be relined with an appropriate code approved liner.

- Brick or modular block must be a minimum of 4" nominal thickness. Stone construction must be at least 12" thick.
- A newly-built chimney must conform to local codes, or, in their absence, must comply with national regulations.
- An existing chimney must be inspected by a professional, licensed chimney sweep, fire official, or code officer to ensure that the chimney is in proper working order. Any repairs must be completed before installing the stove.
- No other appliance may be vented into the same flue.
- An airtight clean-out door should be located at the base of the chimney.

2.2 Prefabricated Chimneys

A prefabricated metal chimney must be tested and listed for use with solid fuel burning appliances. High Temperature (HT) Chimney Standard UL 103 for the U.S. and High Temperature Standard ULC S-629 for Canada.

The manufacturer's installation instructions must be followed precisely. Always maintain the proper clearance to combustibles as established by the pipe manufacturer. This clearance is usually a minimum of 2", although it may vary by manufacturer or for certain chimney components.

2.3 Chimney Height

The chimney must be at least 3 feet higher than the highest point where it passes through the roof and at least 2 feet higher than the highest part of the roof or structure that is within 10 feet of the chimney, measured horizontally. See fig. 4.

Chimneys shorter than 14 feet may not provide adequate draft. Inadequate draft can result in smoke spillage when loading the stove, or when the door is open. Poor draft can also cause back puffing (ignition of gas build-up inside the firebox) and sluggish performance. The minimum height does not, in itself, guarantee proper chimney performance. Optimum draft force should be in the .05 - .10 in. w.c. range measured by a Magnahelic gauge. Draft at .07 w.c. is ideal.

Excessive chimney height can promote over-strong draft resulting in high stove temperatures and short burn times. Your Jøtul dealer is an expert resource to consult regarding draft issues or other performance-related questions.

2.4 Wall Pass-Throughs

Note: In addition to the methods described here, any listed, pre-fabricated wall pass-through components available from chimney manufacurers may be used.

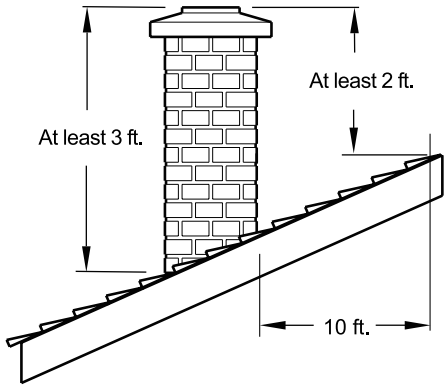

Figure 4. Chimney Height Requirement.

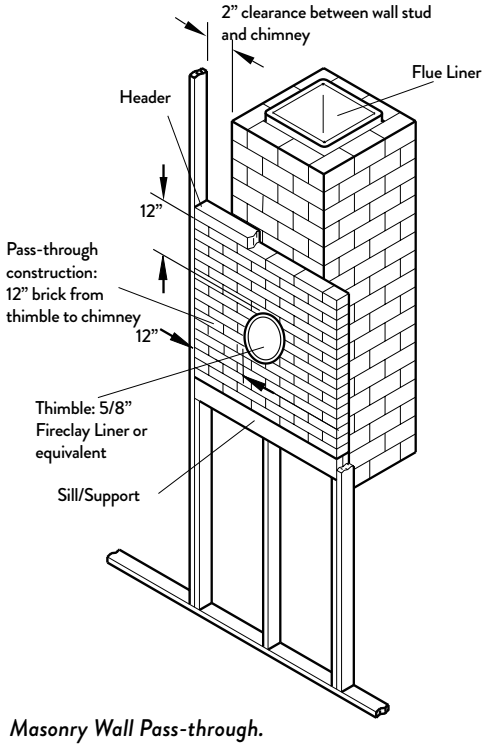

Figure 5. Masonry Wall Pass-through.

In the U.S.

The National Fire Protection Association's publication, NFPA 211, *Standard for Chimneys, Fireplaces, Vents and Solid Fuel Burning Appliances* permits four methods for passing through a combustible wall. Before proceeding with any method be sure to consult with your local building officials to discuss any local code requirements.

Common Method:

See fig. 5. Remove all combustible materials from the pass-through area (around the chimney connector), a minimum 12". A 6" diameter connector will require a 31" x 31" square opening.

The opening must be filled with at least 12" of brick around a fireclay liner. The liner must be ASTM C35 or equivalent, having a minimum wall thickness of 5/8".

The Pass-through must be at least 18" from combustible ceiling materials.

It will be necessary to cut wall studs, install headers, and construct a sill frame to maintain the proper dimensions and to support the weight of the brick.

The bricks must be solid brick with a minimum of 3 inches thick (nominal 4").

Refractory mortar must be used at the junction of the chimney and the pass-through liner. The pass-through liner must not penetrate the chimney liner beyond the inner surface of the chimney liner. Use extreme care when constructing the hole in the chimney liner as the tiles can shatter easily.

In Canada

The installation must conform to CAN/CSA-B365, Installation Code for Solid Fuel Burning Appliances and Equipment. Before proceeding be sure to consult your local building inspector.

Common Method:

This method requires the removal of all combustible materials from at least 18" around the chimney connector's proposed location. A 6" round liner requires a minimum opening 43" x 43" square.

Locate the pass-through at least 18" from combustible ceiling materials.

The space that is cleared of combustible materials must remain empty. Sheet metal panels can be used to cover the area. However, when using a panel on both sides of the wall, each cover must be installed on noncombustible spacers at least 1" from the wall. If one panel of sheet metal is to be used it may be installed flush to the wall.

See section 5.3.1 and 5.3.2 of CAN/CSA - B365-M91. Consult your local building inspector, authorized Jøtul Dealer, NFPA 211 in the U.S. or CAN/CSA-B635 in Canada for other approved wall pass-through methods.

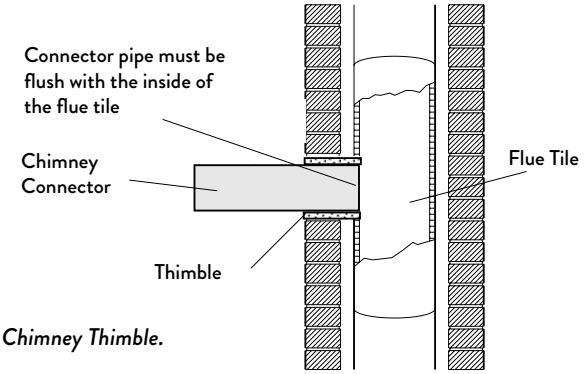

Figure 6.
Masonry Chimney Thimble.

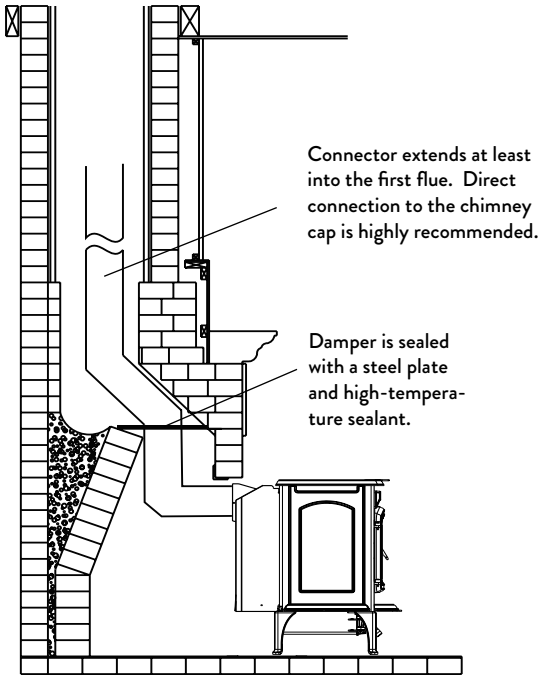

Figure 7. Hearthmount Installation.

3.0 Connecting to the Chimney

3.1 Masonry Chimney

A ceramic or steel thimble is commonly used to penetrate the chimney wall into the flue. The chimney connector/stove pipe must slide completely inside thimble to the inner surface or the flue liner. It may be necessary to include a thimble sleeve having a slightly larger diameter than the connector pipe. See **fig. 6.**

The connector pipe and/or thimble sleeve must not protrude into the flue liner or otherwise restrict draft.

Use refractory cement to seal the seams between the chimney connector, sleeve, and thimble.

Do not connect this stove to a chimney flue servicing another appliance of any kind.

3.2 Hearthmount into a Masonry Fireplace

The Jøtul F 35 on standard legs may be installed into a masonry fireplace with a minimum opening height of 16 3/4".

Use Short Leg Kit 157636 to install into a fireplace with a minimum opening height of 25 1/2". ***Short legs are approved only for use on a code-approved, masonry fireplace hearth.***

Building code requires that the fireplace damper plate be removed or securely fixed in the open position.
A connector pipe must then extend from the stove's flue exit through the damper area of the fireplace and into the chimney tile liner. See **fig. 7.** In any case, **we recommend that a full liner be installed through any masonry chimney to ensure good performance.**

The cross-sectional area of the flue of a chimney with no walls exposed to the outside below the roofline may be no more than three times the cross-sectional area of the stove flue collar.

The cross-sectional area of the flue of a chimney with one or more walls exposed to the outside below the roofline may be no more than two times the cross-sectional area of the stove flue collar.

If the chimney liner is too large to accommodate the stove, an approved relining system must be installed to resize the flue.

A new sheet metal damper block-off plate must be installed around the connector pipe at the damper frame and sealed with the proper sealant (usually High-Temp Silicone).

3.3 Prefabricated Chimneys

When connecting the Jøtul F 35 to a prefabricated metal chimney always follow the pipe manufacturer's instructions and be sure to use the all components that are required. This usually includes a chimney adaptor that is secured to the bottom section of the metal chimney and allows the chimney pipe to be secured to it with two sheet metal screws. See fig. 8.

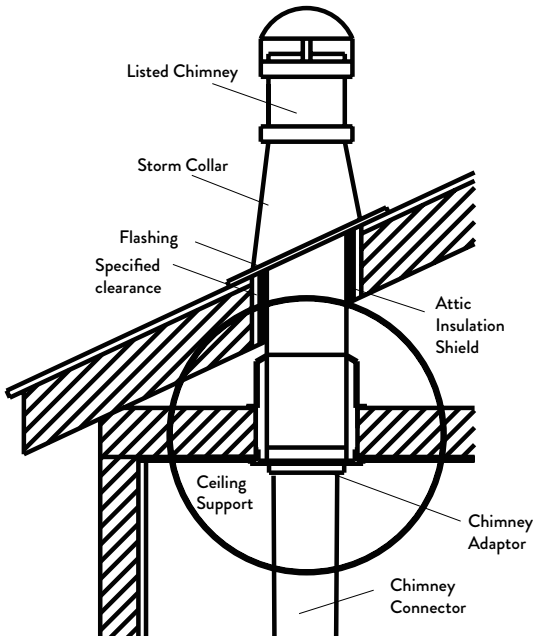

Figure 8. Prefabricated Listed Type HT Chimney.

3.4 Mobile Home Installation

The Jøtul F 35 is approved for installation in manufactured mobile homes provided the following requirements are met:

1. All chimney components, including chimney sections, supports, spark arrestor, etc., shall comply with the Standard for Factory-built Chimneys for Residential Type and Building Heating Appliances, UL 103 and/or CAN/ULC-S629 Standard for 650°C Factory-built Chimneys.

2. The chimney shall be attached directly to the stove and extend at least 3 ft. above the roof. Termination must be at least 2 ft. above the hightest elevation of any part of the mobile home within 10 ft.

3. In order to allow for transportation of the mobile home, the chimney termination shall be readily removed at or below an elevation of 13.5 ft. above ground level and reinstalled without use of special tools or instructions.

4. A spark arrester must be installed at the termination. The net free area of the arrester above the chimney outlet must not be less than four times the net area of the chimney outlet, and the vertical height of the arrester must not be less than one-half the diameter of the chimney flue. Openings shall not permit the passage of a sphere having a diameter larger than 1/2", and shall permit the passage of a sphere having a diameter of 3/8".

5. Direct connection of the stove to an outside air source is required. Use Outside Air Kit #157637 . Do not substitute any other connection method or device. See Appendix, Section 7.0. Duct termination must not be installed at a level that is higher than the air inlet located at the bottom of the stove.

6. The stove must be secured to the mobile home floor. Use Floor Bracket Kit 157321.

7. When the chimney exits the mobile home at a location other than through the roof, and exits at a point 7 ft. or less above the ground level, a guard or other method of enclosing the chimney, must be provided at the point of exit for a height up to 7 ft. Openings of this chimney guard shall not permit penetration of a 3/4 in. diameter rod, or contact with the chimney by a 1/2 inch diameter rod inserted through the opening a distance of 4 inches.

8. Provision must be made for electrical grounding of the chimney, chimney connector, and stove in accordance with local building codes.

WARNING: Do not install this appliance in a sleeping room.

CAUTION: The structural integrity of the mobile home floor, walls, and ceiling/roof must be maintained.

4.0 Clearance to Combustibles

4.1 Floor Protection

The Bottom Heat Shield must remain on the stove unless the stove is installed on concrete poured on earth.

The Jøtul F 35 also requires one of the following forms of hearth protection if not installed directly on concrete poured on earth:

1) Any non-combustible material.

2) Any UL/ULC Type I, Type II, or Warnock Hersey Listed hearth board.

All floor protection materials must be non-combustible (i.e., metals, brick, stone, mineral fiber boards, etc.). Any organic materials (i.e., plastics, wood, paper products, etc.) are combustible and must not be used.

***IN THE U.S*: Floor protection must extend continuously forward from the door opening at least 16 in. and 8 in. from the sides of the door opening.** Protection must also extend 2 in. from the rear and 2" to the sides under any horizontal chimney connector. This will result in a minimum floor protector measuring 30" wide x 40.5" deep for rear exit and 30" wide x 43.25" deep for top exit. See figs 9 and 9a.

***IN CANADA:* Floor protection must extend continuously 18" from the front of the stove and 8 in. from the sides *and rear*.** It must also extend 2 in. under any horizontal chimney connector. This results in a floor protector dimension of 39" wide x 48.5" deep for rear exit and 39" wide x 45.55" deep for top exit. See figs.10 and 10a.

4.2 Clearances to Walls and Ceilings

The clearances listed and diagramed in this manual have been tested to UL and ULC standards and are the minimum clearances to combustible materials specifically established for the Jøtul F 35.

A combustible surface is anything that can burn (i.e. sheet rock, wall paper, wood, fabrics etc.). These surfaces are not limited to those that are visible and also include materials that are behind non-combustible materials. If you are not sure of the combustible nature of a material, consult your local fire officials.

Remember: "Fire Resistant" materials are considered combustible; they are difficult to ignite, but will burn. Also "Fire-rated" sheet rock is also considered combustible.

Contact your local building officials about restrictions and installation requirements in your area.See pages 12-13 for clearance requirements and diagrams.

4.3 Using Shields to Reduce Clearances

Double Wall Connector: Listed double wall pipe is an acceptable alternative to connector pipe heat shields.

Wall-Mounted Protection: When reducing clearances through the use of wall-mounted protection:

In the U.S. refer to NFPA 211, *Standard for Chimneys, Fireplaces, Vents and Solid Fuel Burning Appliances*, for acceptable materials, proper sizing and construction guidelines.

In Canada, refer to CAN/CSA-B365, *Installation Code for Solid-Fuel Burning Appliances and Equipment*, also for acceptable materials, proper sizing and construction guidelines.

Notice: Many manufacturers have developed woodstove accessories that permit clearance reduction. Use only those accessories that have been tested by an independent laboratory and carry the laboratory's testing mark. Be sure to follow all of the manufacturer's instructions.

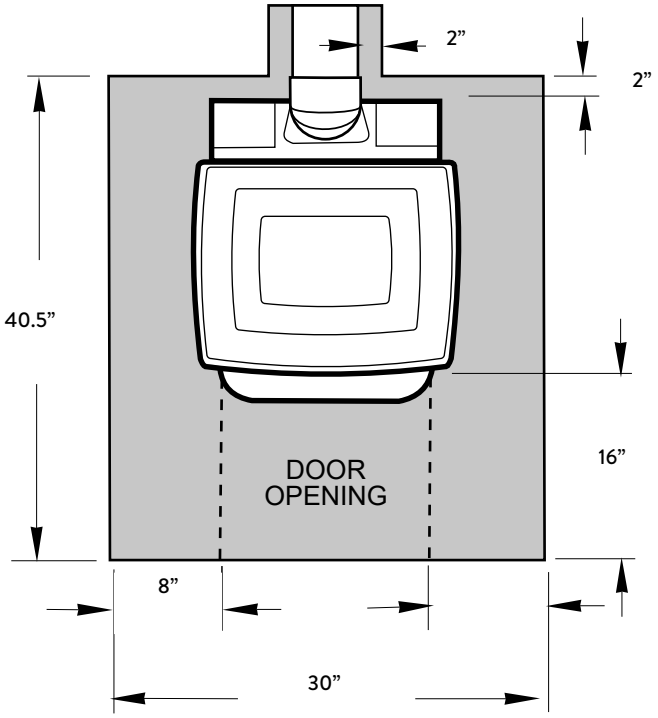

Figure 9. Floor Protection minimum dimensions, U.S. Rear Exit.

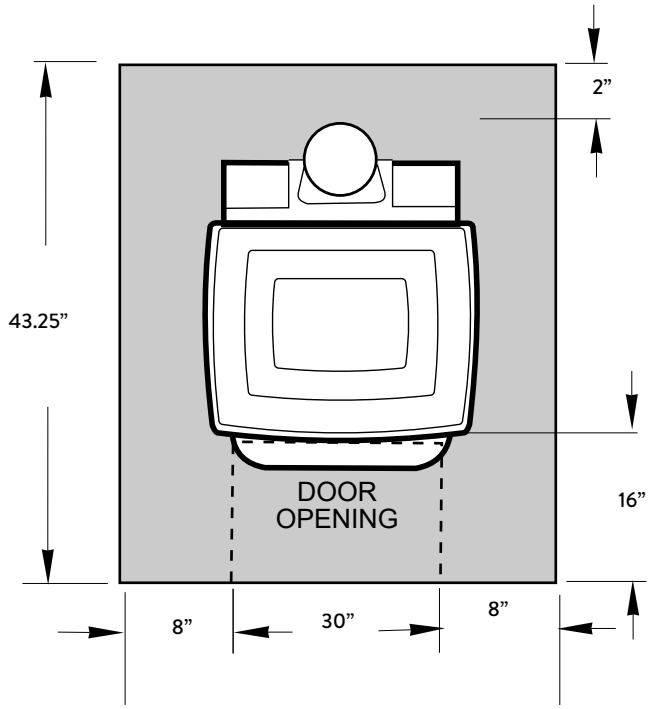

Figure 9a. Floor Protection minimum dimensions, U.S. Top Exit.

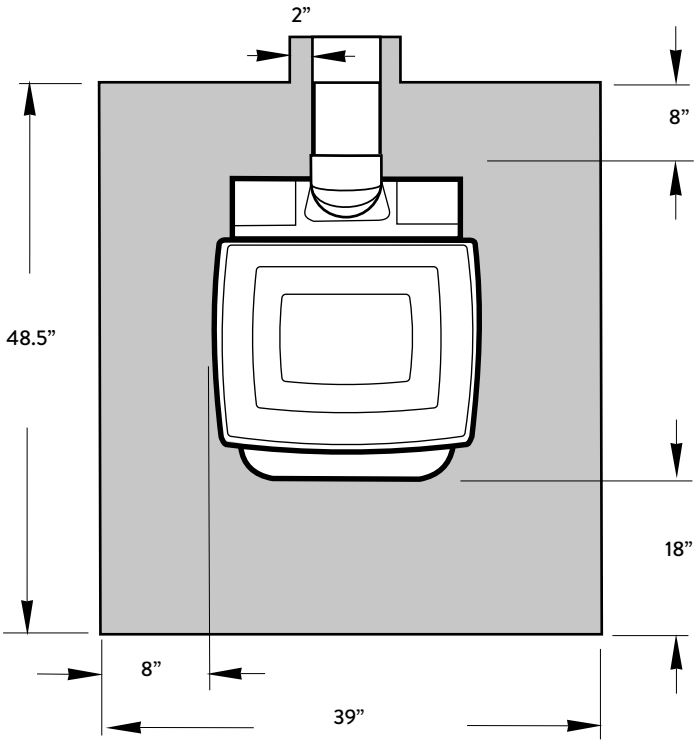

Figure 10. Floor Protection minimum dimensions, CAN. Rear Exit .

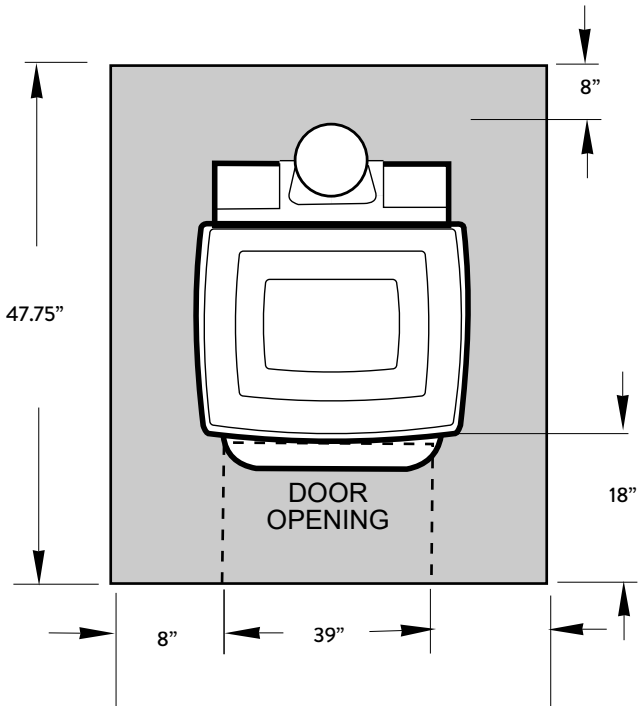

Figure 10a. Floor Protection minimum dimensions, CAN. Top Exit.

4.4 Alcove Installation

The Jøtul F 35 can be installed in an alcove as diagrammed in **figs. 11**.-12.

1. **Only double-wall chimney connector may be used.**
2. Wall and ceiling protection, if used, must extend over the entire area.
3. Alcove floor protection must consist of a Type I or Type II, UL/ULC 1618 or WHI listed hearth pad or a non-combustible material.
4. **Minimum Alcove Ceiling Height from Floor:**
   Unprotected Surface - 72”
   Protected Surface - 65”

The Short Leg option is not approved for use in Alcove installations.

4.5 Clearances to Fireplace Mantels and Surrounding Trim

See fig. 13 and the Clearance Chart on page 13 for approved clearances to combustible materials that may be part of fireplace construction.

Mantel and Trim clearances may be reduced by 50% with use of shielding constructed in accordance with NFPA 211 specifications.

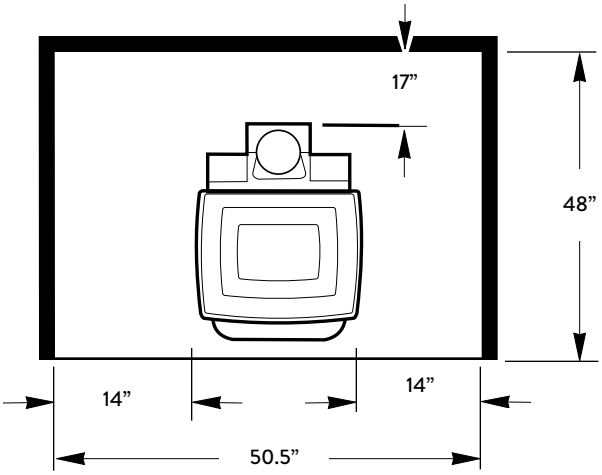

Figure 11. Alcove Clearances.

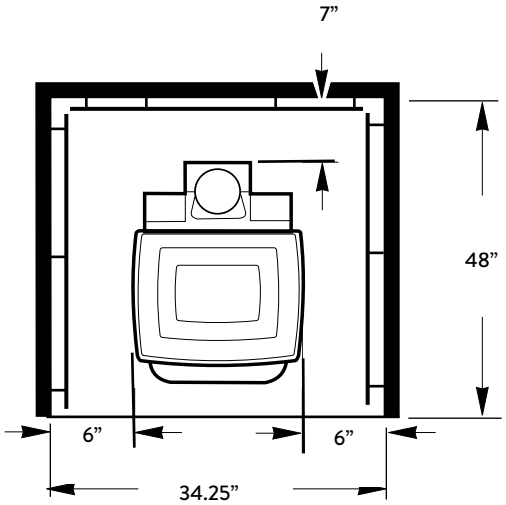

Figure 12. Alcove with Wall Protection.

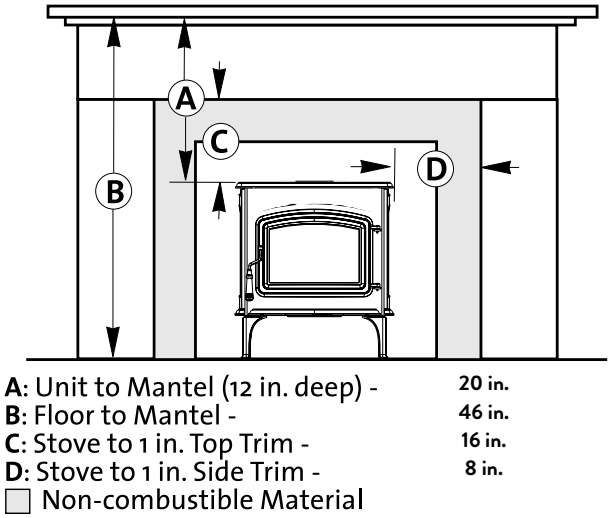

Figure 13. Mantel and Trim Clearances

4.6 Jøtul F 35 Clearance Specifications

	UNPROTECTED WALLS					PROTECTED WALLS PER NFPA211 OR CAN/CSA-B365-M93				
	SIDE	REAR	CORNER	CORNER TO FRONT FLOOR PROTECTION**	FRONT FLOOR PROTECTION WIDTH**	SIDE	REAR	CORNER	CORNER TO FRONT FLOOR PROTECTION**	FRONT FLOOR PROTECTION WIDTH**
Single Wall Connector	A 13”	B 14”	C 10”	D US: 61 1/4” CAN: 63 1/4”	E US: 30” CAN: 39”	F 4”	G 6”	H 4”	I US: 53” CAN: 55”	J US: 30” CAN: 39”
Double Wall Connector	A 13”	L 8”	C 9”	D US: 59 7/8” CAN 61 7/8”	E US: 30” CAN: 39”	F 4”	G 6”	H 4”	I US: 53” CAN: 55”	J US: 30” CAN: 39”

** US and CAN measurements are not the same and are not interchangeable.

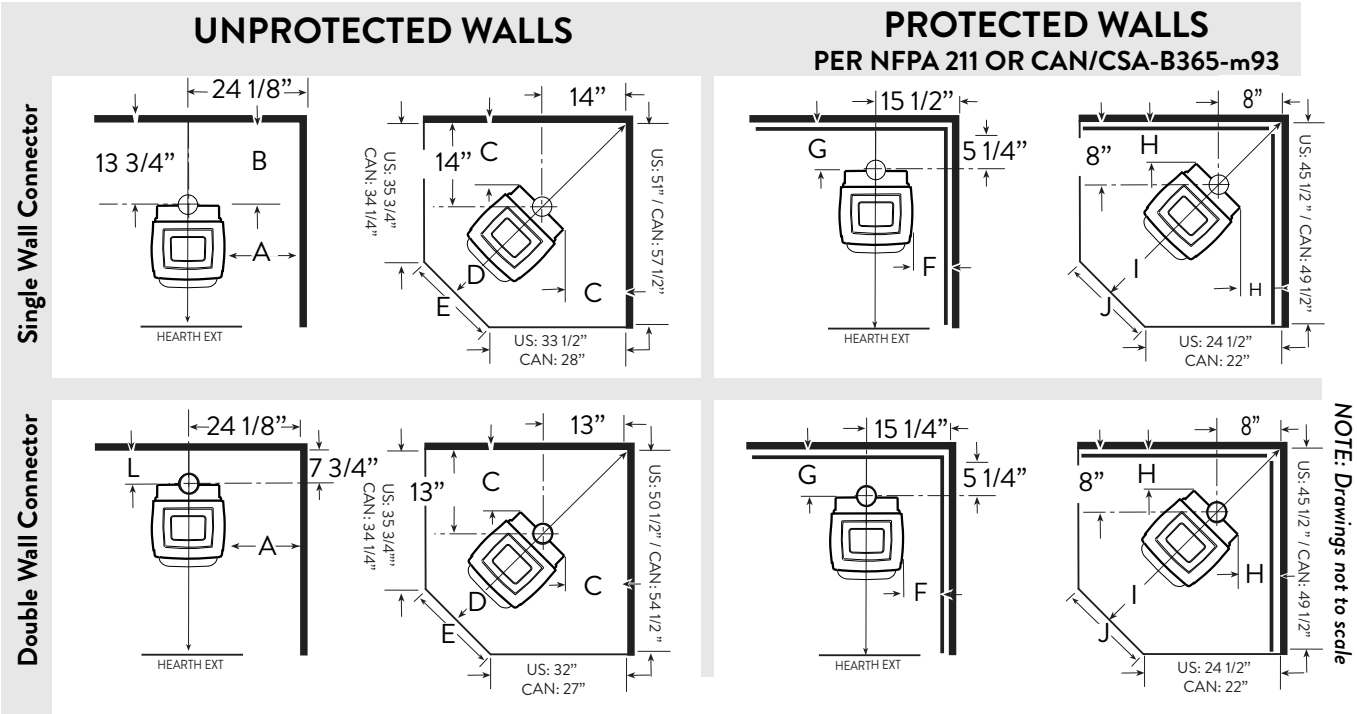

Figure 14.

5.0 Operation

Please read the following section before building the first fire in your new Jøtul F 35.

5.1 Combustion Efficiency

The Jøtul F 35 has an EPA tested High Heating Value (HHV) efficiency rate of 68.47%. There are aspects of efficiency, however, that you should be aware of in order to get the most from your stove.

Operation habits and fuel moisture can have a significant effect on efficiency. Poorly seasoned wood having a higher than optimum moisture content, can reduce the amount of energy transferred to the living area as a result of the energy expended to evaporate the excess fuel moisture in order for the wood to burn. Operational aspects, such as not building a robust kindling fire to readily ignite the larger fuel pieces, can result in an inefficient smoldering fire. Additionally, most modern wood heaters' optimum performance and efficiency are at the medium to medium -to-low burn rates.

The location of the stove can have a significant effect on heating efficiency, primarily in regard to heat distribution. For example, a wood heater centrally located in the residence in an open living area will likely provide better circulation of heat than will a stove located in a room adjacent to the larger living area.

5.2 Minimize Carbon Monoxide Emissions

Testing the F 35 to CSA B414.1-10 resulted in a carbon monoxide emission rate of 1.35 grams per minute. Most means of combustion produce CO, including wood fires. Maintaining a well-established fire and avoiding operation that produces a smoldering, smoky fire, will greatly reduce CO levels.

It is highly recommended that a CO monitor (detector) be installed in the same room as the stove. The monitor, however, should be located as far away as possible from the stove to avoid alert soundings when adding fuel to the fire.

5.3 Wood Fuel and Performance

Jøtul specifies the use of only 16" fuel for several important reasons. Foremost, the combustion system was specifically designed for optimum performance with 16" fuel. There can be several unwanted consequences of using fuel longer than 16". Longer fuel pieces can potentially diminish combustion and emissions performance. Longer pieces can also present an interference with proper door closing operation and potentially result in broken glass should the fuel extend to the opening of the firebox

The F 35 is designed to burn natural wood only. Higher efficiencies and lower emissions generally result when burning air-dried, seasoned hardwoods, as opposed to softwoods, green or freshly cut hardwoods. Wood that has been air-dried for a period of 6 to 14 months will provide the cleanest, most efficient heat.

Wood seasoned more than 2 years will burn too quickly to take advantage of the stove's low end efficiency strength. A seasoned log will have check marks (cracks) on the ends and be lighter than an unseasoned log which will show little or no check marks.

We recommend using a moisture meter to determine the moisture content of your wood. For purposes of home heating, your fuel should have a moisture content between 12 - 20%. Wood with higher moisture content will burn, however, very inefficiently. Most of its heat value will be lost to driving water out of the wood. Worse, that moisture will condense as creosote in the relatively cool chimney flue, increasing the potential for a chimney fire. ***Use of unseasoned wood defeats the purpose of any modern wood-burning stove.***

BURN UNTREATED WOOD ONLY. DO NOT BURN:

- Coal
- Synthetic fuel or logs
- Materials containing asbestos
- Manure or animal remains
- Garbage
- Material containing plastics
- Unseasoned wood
- Lawn clippings or yard waste
- Material containg rubber, including tires
- Waste petroleum products, asphalt products, paints, paint thinners or solvents
- Construction or demolition debris
- Railroad ties or pressure-treated wood
- Salt water driftwood or other previously salt-water; saturated materials
- Paper products, cardboard, plywood, or particle board. *(The prohibition against burning these materials does not prohibit the use of fire starters made from paper, cardboard, saw dust, wax or similar substances for the purpose of starting a fire.)*

Burning of any of the materials listed above can result in the release of toxic fumes, cause smoke, or render the heater ineffective and cause smoke

• NEVER USE GASOLINE, GASOLINE-TYPE LANTERN FUEL, KEROSENE, CHARCOAL LIGHTER FLUID OR SIMILAR LIQUIDS TO START OR "FRESHEN-UP" THE FIRE. ALWAYS KEEP SUCH LIQUIDS AWAY FROM THE HEATER AT ALL TIMES.

WARNING

ALWAYS WEAR STOVE GLOVES WHILE TENDING THE FIRE.

NEVER ALLOW THE FIRE TO REST DIRECTLY ON THE GLASS. KEEP THE LOGS SPACED AT LEAST ONE INCH FROM THE GLASS TO ALLOW FOR PROPER AIR FLOW WITHIN THE STOVE. AVOID STRIKING THE GLASS WITH LOGS.

OPERATE THIS STOVE ONLY WITH THE FRONT DOOR FULLY CLOSED. OPERATION WITH THE DOOR PARTIALLY OPEN MAY RESULT IN OVER-FIRING. IF THE DOOR IS LEFT PARTIALLY OPEN, GAS AND FLAME MAY BE DRAWN OUT OF THE STOVE CREATING SAFETY RISKS FROM BOTH FIRE AND SMOKE.

5.4 How Your Jøtul F 35 Works

When used with dry wood and a well-drafting chimney system, modern non-catalytic wood stoves burn fuel efficiently by the precise control and delivery of primary and secondary air to the fire.

Primary Air is drawn into a front inlet in the stove bottom and directed through a regulator shutter under the front door before entering the lower fire chamber. Additional primary air is directed to the top of the load door to act as an air wash to help prevent extreme soot build-up on the glass panel. The amount of primary air available to the fire determines the intensity of heat output and rate of fuel combustion; the greater the amount of air, the greater the heat output, the faster the wood burns. The primary air setting also determines the effectiveness of the air wash over the glass; the higher the setting, the cleaner the glass.

Additional air is separately directed into the top of the fire chamber to support combustion of exhaust gasses before passing out of the stove. This unregulated ***Secondary Air*** enters through an inlet in the rear of the stove bottom and is heated as it passes through the rear of the stove into manifold at the top rear of the firechamber. The secondary air is then directed through a stainless steel baffle plate.

Volatile gases, released unburned from the fuel bed, rise to the baffle where they are turbulently mixed with the hot, fresh oxygen. Secondary combustion then occurs before the gases pass into the heat exchange chamber. The action of secondary combustion can be readily seen through the viewing glass as slow, rolling flames suspended over the main fuel bed and smaller jets of flame extending from the baffle manifold ports. At the same time, no smoke will be observed exiting the chimney. This is evidence that the stove is operating at the so-called "sweet-spot" wherein optimum efficiency and lowest particulate emissions are realized. See fig. 15.

Use a Stove-top Thermometer

Determining the primary air setting for the best overall performance for your particular needs and installation will be established over time and experience. Each installation has unique characteristics that affect stove performance. You should use a stove-top thermometer to monitor the status of the fire. Place the thermometer on the stove top, centered to one side or the other. Generally speaking, once the stove temperature has reached 400°F - 600°F (204°C -316°C), the air control may be set in a mid-range position to allow adequate oxygen to support efficient combustion throughout the burn cycle.

You can also monitor stove performance through the window. Peak combustion efficiency occurs when exhaust gas is burned at the baffle in the top of the firebox. This is apparent as rolling yellow-orange flames appearing at the secondary air ports in the underside of the baffle plate and forward tube. At this stage, little or no smoke will be visible exiting the chimney.

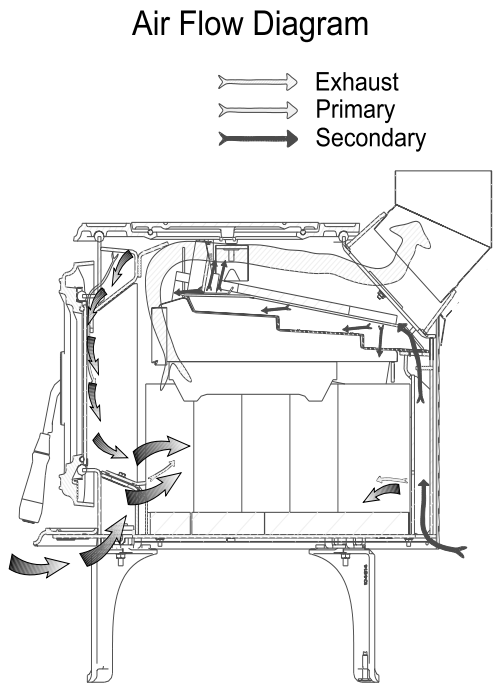

Figure 15. Combustion air paths

5.5 Air Control Settings

Use the following guide for best performance.

Burn Rate	Air Control Setting
Low	Fully Closed
Medium	1/2" Open
High	Fully Open

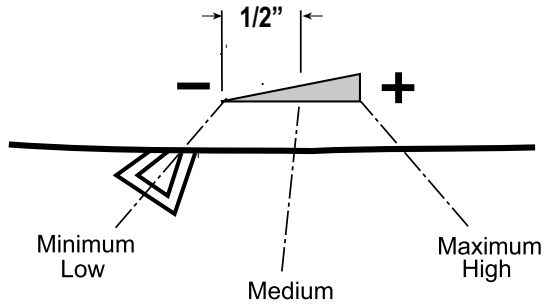

Figure 16. Air Control Settings

5.6 Controlling the Fire

Combustion intensity is controlled by the position of an air shutter located under the front door. You adjust its position using the handle located under the ash lip. Slide the handle to the left to decrease air to the fire. Sliding it to the right increases air delivery and consequently, fire intensity. See fig. 16. The shutter regulates and directs primary air to the front of the burn chamber. Push it to the right to allow maximum air to support combustion. It should be fully open when first starting or rekindling a fire, or when greater heat output is desired.

5.7 Break-In Procedure

Although your Jøtul F 35 is constructed of welded, 3/16" steel plate, it also incorporates cast iron components. This material requires the stove to be"broken-in" gradually so that heat expansion does not occur too quickly and cause damage. The following steps describe the proper break-in procedure for your stove. Use a magnetic stove-top thermometer to monitor stove temperature, placed directly on the cookplate.

Set the Primary Air Shutter fully open, all the way to the right.

1. Light a small fire of newspaper and kindling at the front of the stove. Gradually add small pieces of wood, but only allow the stove to reach a maximum surface temperature of 200°F (93° C). Continue burning at this low rate for approximately 1 hour.
2. Allow the stove to cool to room temperature.
3. Light a second fire, allowing the stove to reach a maximum temperature of 300°F (149°C) for 1 hour.
4. Cool the stove to room temperature.
5. Light a third fire and gradually allow the stove to reach a surface temperature of 400°F (204°C)
6. Cool the stove to room temperature. This completes the "break-in" procedure.

Note: If the temperature exceeds the limit during any break-in fire, move the Air Shutter all the way to the left to shut off the air supply completely. It is normal that the stovetop temperature will continue to climb until the fuel burns down somewhat. Once the fire is out and the stove has cooled to room temperature, continue the break-in procedure. Never attempt to reduce the temperature by removing burning logs from the fire.

Break-in Odors: It is normal for a newly-painted stove to emit odor and smoke during the first few fires, and these may set off smoke alarms. This condition is caused by curing of the high temperature paint and will diminish with each subsequent fire. It is advisable to open windows or doors to provide plenty of fresh air and cross-ventilation during the break-in period.

WARNING:

NEVER OVER-FIRE THE STOVE. IF ANY PART OF THE STOVE OR CHIMNEY GLOWS, YOU ARE OVER-FIRING. A HOUSE FIRE OR SERIOUS DAMAGE TO THE STOVE OR CHIMNEY COULD RESULT. IF THIS CONDITION OCCURS, IMMEDIATELY CLOSE THE AIR CONTROL.

ATTEMPTS TO ACHIEVE HEAT OUTPUT RATES THAT EXCEED HEATER DESIGN SPECIFICATIONS CAN RESULT IN PERMANENT DAMAGE TO THE HEATER.

5.8 Starting and Maintaining a Fire

Burn only solid wood directly on the bottom of the stove firechamber. Do not elevate the fire in any way.

See Section 8.1 of the Appendix on page 22 for detailed information regarding the cordwood test method fire-building procedure from a cold start to a high fire, medium fire or cold fire.

Top-Down Fire Building - See fig. 17.

Many people find this method to be superior to the traditional method.

1. With the primary air control lever in the full open position *(to the right)*, place two short 1/4-split logs on the firebox floor, perpendicular to the rear wall, about 6 inches apart.
2. Place kindling across the base logs.
3. Place one or two smaller split logs on top of the kindling.
4. Place newspaper between the two bottom logs under the kindling. Light the news paper and close the door. Continue to add kindling and small logs as necessary to build the fire. Keep the air control fully open until the fire is well-established.
5. Add more logs as the fuel bed become fully involved and use the stove-top thermometer to monitor progress. When the stove has reached a surface temperature range of between 400° and 600°, (204°C -316°C), adjust the primary air control lever as necessary to generate the heat output and burn time desired.

You can also monitor stove performance through the window. Peak combustion efficiency occurs when exhaust gas is burned at the baffle in the top of the firebox. This is apparent as rolling yellow-orange flames appearing at the secondary air ports in the underside of the baffle plate and forward tube. At this stage, little or no smoke will be visible exiting the chimney.

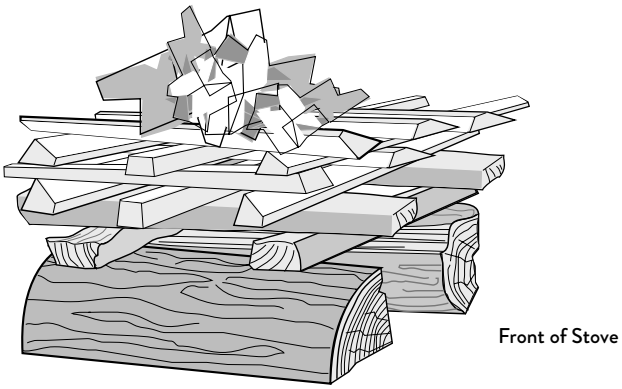

Figure 17. Top-down fire starting structure.

5.9 Adding Fuel

Follow this procedure when reloading the stove while it is still hot and a bed of hot embers remains:

- Always wear gloves when tending to the stove.
- **Adjust the Primary Air Shutter Lever to the fully open position** - all the way to the right. Wait a few seconds to re-establish strong draft before opening the load door. This will allow fresh air to flush the firebox and prevent smoke escaping when the door is opened.
- **Minimize CO exposure:** Open the door slightly, and hesitate a moment to allow exhaust purge, then open the door fully.
- Use a stove tool or poker to evenly distribute coals and embers around the firebox.
- Load the fuel, usually with smaller logs first.
- Close the door, being sure to latch the door tightly.
- Wait 5 – 10 minutes to re-establish the fire before setting the air controls for the desired heat output and burn time. (If there is at least a 2" thick ember bed when reloading, it may be possible to close the door and immediately adjust the air control setting).
- Set the Air Shutter for the desired heat output.

WARNING: Operate the stove only with the front door fully closed except for refueling. Operation with the door partially open may result in overfiring. Also, if the door is left partially open, combustion gas and flame may be drawn out of the stove, creating risks from both fire and smoke.

5.10 Creosote Formation and the Need for Removal

When wood is burned slowly, it produces tar and other vapors that combine with moisture to form creosote. Creosote vapors condense in the relatively cool chimney flue, and creosote residue accumulates on the flue lining. When ignited, this creosote fuels an extremely hot fire.

The chimney connector and chimney flue should be inspected at least every other month during the heating season to determine if creosote buildup has occurred.
If creosote has accumulated, it should be removed to reduce the chance of a chimney fire.

In the event that creosote ignites in the flue, the resulting fire is often accompanied by a roaring noise and crackling sound as flakes of burning creosote break loose. If you suspect you are having a chimney fire, immediately close the air controls and make sure the door is closed securely. Call the fire department and have everyone leave the house.

Do not attempt to extinguish the fire. Opening the door will only supply additional oxygen and intensify the fire. When the fire in the flue has subsided, resist the temptation to open the door to check on the fire. The fire may have suffocated, but could re-ignite with a supply of fresh air. After a chimney fire, do not use the stove until the chimney connector and flue have been cleaned and inspected to ensure no damage has been sustained.

See Section 6.6 of this manual regarding chimney cleaning.

5.11 Ash Removal

Remove ashes whenever accumulation nears the primary air port located inside the firechamber just under the door opening.

Always wear safety gloves when handling the ashes.

Ashes should only be placed in a metal container equipped with a tight sealing lid. The container should be placed on a noncombustible floor or on the ground, well away from all combustible materials, pending final disposal. If the ashes are to be disposed of by burial in soil or otherwise locally dispersed, they should be kept in the closed container until all cinders have thoroughly cooled.

6.0 Maintenance

6.1 Door Latch Adjustment

Over time, as the door gasket becomes compressed, it may be necessary to adjust the door latch in order to maintain the integrity of the door seal. To check the front door seal, close and latch the door on a dollar bill and slowly try to pull the bill free. You should feel resistance as you pull. If it can be easily removed, the seal is too loose. Follow this procedure to tighten the latch mechanism.

Tools Required:
- 4 mm hex key

1. Remove the two socket head screws and latch keeper from the stove. See fig. 18.
2. Remove one of the shim plates from the latch cavity and re-install the latch keeper. Retain the shim plate(s) removed for future use.
3. Test the seal integrity using the dollar bill.

The door gasket will compress over time. When the latch can no longer be tightend by shim removal, install a new gasket and replace the shim plates.

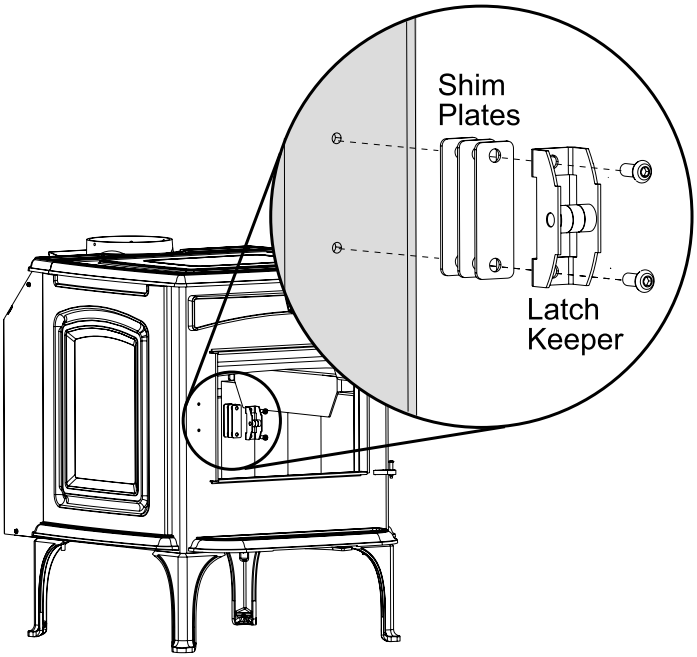

Figure 18. Latch adjustment.

6.2 Glass Care

Cleaning

On occasion it will be necessary to clean the carbon deposits and fly ash off of the glass. If these deposits are allowed to remain on the glass for an extended period of time, the surface may become etched and cloudy. Any creosote that might develop on the glass will burn off during the next hot fire.

Follow this glass cleaning procedure:

1. Glass must be completely cool.
2. Only use cleaning products specifically formulated to clean solid fuel appliance glass and follow the manufacturer's instructions. **Use of abrasive compounds or solutions will damage the glass. DO NOT USE AMMONIA-BASED GLASS CLEANERS.**
3. Rinse and dry glass completely before burning the stove. Polish with a piece of newspaper.

Caution! Always operate the door slowly and carefully to avoid cracking or breaking the glass. Never use the door to push wood into the firebox. If the glass becomes cracked or broken follow the replacement procedure in Section 6.5.

Never operate the stove with a cracked or broken glass panel.

Important: Replace glass only with ceramic glass panel PN 224923 specifically designed for the Jøtul F 35, available from your local Jøtul dealer. Do not substitute any other glass.

6.3 General Care

Regular maintenance will ensure excellent performance and prolong the life of your stove. The following procedures do not take long and are generally inexpensive. When performed consistently, they will lengthen the life of your stove and provide many years of service.

- Regularly empty the stove of all soot and ashes. Only use a vacuum for this job if the vacuum is specifically designed to handle ashes. **CAUTION: Ashes maycontain hidden, live embers. Be certain the ash bed contains no live embers before using a vacuum.**
- Inspect the stove: Using a strong light inspect the stove inside and out for cracks or leaks.
- Replace any broken bricks. See fig. 35, page 24. DO NOT OPERATE THE STOVE WITH BROKEN OR MISSING BRICKS.

6.4 Gasket Replacement

Tools needed:

- needle nose pliers
- wire brush
- 4mm hex key
- gasket cement

1. Use the pliers to remove the small C-clips from the door hinge pins. Remove the door from the stove and place it face down on a protected surface.
2. Use the hex key to remove the warning label plate from the back of the door.
3. Use pliers to remove the old gasket and adhesive from the door.
4. Thoroughly clean the channel with a wire brush.
5. Apply a small bead of gasket cement to the channel as shown in fig. 19. DO NOT APPLY CEMENT TO THE GLASS CLIPS OR THE CLIP LANDING AREAS.
6. Starting at the center of the gasket length and the top center of the channel, gently press each gasket half into the channel. Do not stretch the gasket. Wrap the ends at the center of the bottom as shown in fig. 19.
7. Replace the Warning Plate.
8. Replace the door. Close and latch the door and then reopen. Wipe away any excess cement that may have squeezed out from around the gasket.
9. Replace the C-clips onto the hinge pins.

Description	Part Number
1. Door Gasket	223858
2. Glass Gasket	200024
3. Screw, M6x10 Button Hd.	117978
4. Glass Clip Ass'y.	157642
5. Glass Panel	224923
6. Warning Plate	226905

6.5 Glass Replacement

Tools needed:

- 4mm hex key

1. Lift the door gasket over the glass clips enough to expose the clip button head screws. See fig. 20. Use the 4mm hex key to loosen the glass clips just enough to remove the glass panel. It is not necessary to completely remove the clips from the door.

   If replacing the glass gasket, follow steps 3-5 in section 6.4.
2. Position the new glass panel and tighten the glass clips just snug. Avoid overtightening or placing uneven pressure on the glass.
3. Reposition the door gasket over the glass clips.

Figure 20. Loosen the glass clips.

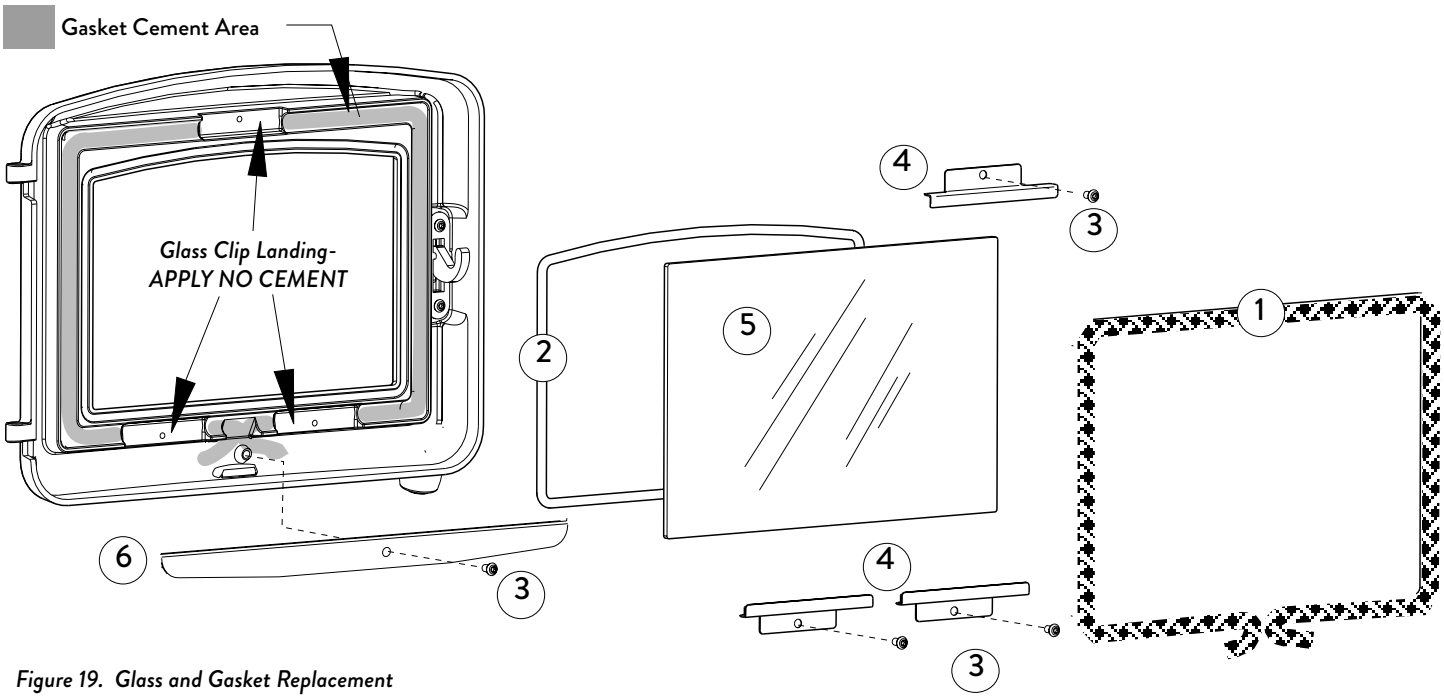

Figure 19. Glass and Gasket Replacement

6.6 Chimney System

The Jøtul F 35 is designed to burn cleanly and efficiently when used according to the guidelines in this manual. In order to maintain proper performance, you should inspect the chimney and chimney connector at the beginning of each heating season and then every other month during the heating season. Clean the chimney whenever creosote and fly ash accumulation exceeds 1/4 inch in any part of the system.

Chimney brushes are available from your local Jøtul dealer or hardware supply store. Your dealer can also refer you to a reputable, professional chimney sweep who will have all the equipment to ensure a complete and proper job.

WARNING: FAILURE TO KEEP THE CHIMNEY CONNECTOR AND FLUE FREE OF CREOSOTE BUILD-UP CAN RESULT IN A CHIMNEY FIRE.

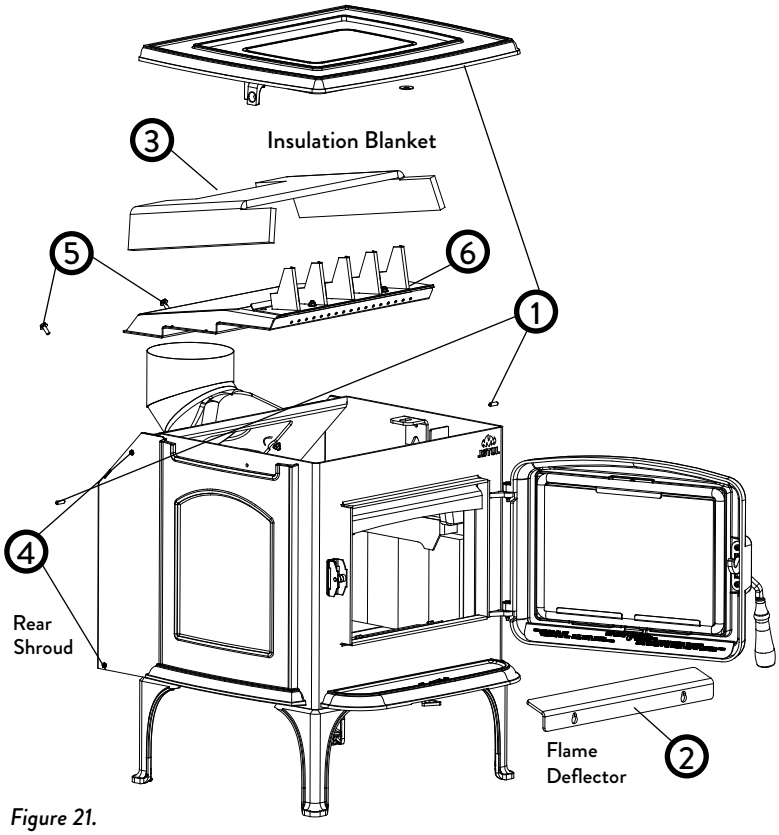

Figure 21.
Secondary Baffle removal.

6.7 Replace Firebricks

DO NOT OPERATE THE STOVE WITH BROKEN OR MISSING BRICKS.

See fig. 35, page 24 and the parts listing on page 25 for the configuration and part number of any firebricks that require replacement. Order bricks through your local Jøtul authorized dealer.

6.8 Secondary Manifold

Inspection

Visual inspection of the manifold can be conducted through the front door opening. Check for evidence of warping or cracks and replace if damaged.

Tools Required

- 10 mm wrench or socket driver
- wire brush
- pliers
- 1/4" socket driver or flat head screwdriver
- 4 mm hex key
- work gloves

Cleaning and Removal / Fig. 21.

1. Remove the Top Plate M6 set screws (#1), one on each side of the stove. Lift the plate off the stove and place it on a protected surface.
2. Lift the steel Flame Deflector (#2) up off of the two shoulder fasteners at the front lip of the firebox and remove it through the front door opening.
3. Lift the Ceramic Insulation Blanket (#3) off the top of the Secondary Manifold (#6) and out of the stove. Place it on a flat surface, taking care to retain its shape.
4. Remove the Rear Shroud by removing two 1/4" set screws (#4) from each side of the back of the stove. Place the shroud on a protected surface taking care not to scratch painted surfaces.
5. Remove the two, M6 Baffle Retainer bolts (#5).
6. Lift the Baffle and Turbulator Assembly (#6) out of the firebox. Clean and inspect the assembly for cracks, warping or other deterioration. Contact your Jøtul authorized dealer for replacement parts.
7. Reverse steps to reassemble.

7.0 Accessory Installation

7.1 Short Leg Kit 157636

Approved for use only in existing code-approved masonry fireplace hearth-mount installations.

Contents:
4 1/4" Steel Legs, (4)

Tools Required:
- 13 mm wrench or socket/ratchet
- work gloves

DO NOT LIFT THE STOVE UP BY THE ASH LIP.

1. Have an assistant tilt the stove up on one side enough to remove the cast iron legs. Fully remove the nuts from the leg studs.
2. Engage the steel leg with the mounting stud. Be certain the two locating tabs on each leg seat with the corner pockets in the stove bottom. Tighten the nuts and carefully set the stove back down.

CAUTION:
Avoid injury- always wear safety gloves when handling sheet metal parts. Read through these instructions to familiarize yourself with the parts before beginning the installation.

Figure 22.
Short Leg installation

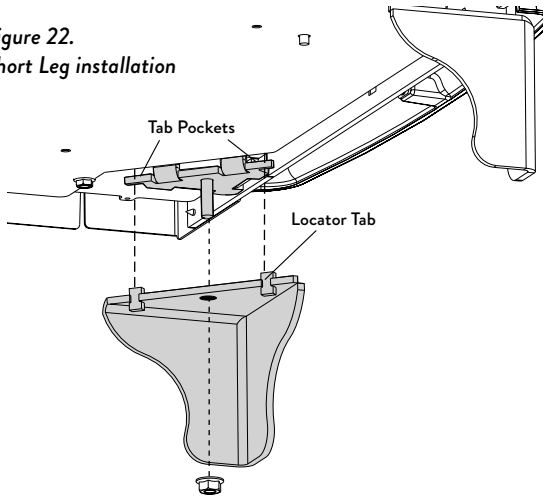

7.2 Outside Air Kit 157637

Contents:
- Outside Air Manifold

Tools Required:
- 10 mm and 1/4 " socket drivers
- safety glasses
- work gloves

You will need the following additional components available at any hardware supplier:
- Exterior Air Inlet Cover
- 4" Aluminum Duct
- Rodent Screen
- 4" Duct Clamps, 2

The exterior air inlet should be installed at a level lower than the stove bottom.

1. **Remove Bottom Heat Shield:** Use the 10 mm socket driver or wrench to remove the four nuts and the Bottom Heat Shield from the studs in the stove bottom as shown in fig. 23. Also remove the four remaining spacer nuts from the studs.
2. **Attach the Outside Air Manifold** directly to the stove bottom using four of the nuts previously removed.
3. Use pliers to remove the air inlet cut-out from the bottom heat shield.
4. Attach the bottom heat shield to the outside air manifold using four sheet metal screws from the Outside Air Kit.

   If the bottom heat shield will not be used, install the sheet metal screws supplied with the outside air kit to plug the associated holes in the manifold.

Figure 23. Outside Air Adaptor installation.

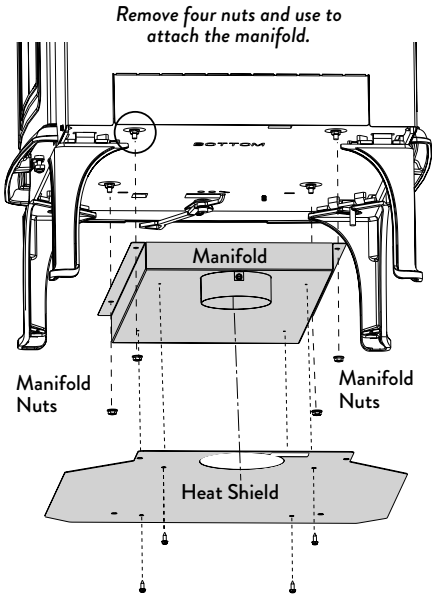

7.3 Mobile Home Floor Bracket Kit 157321

Contents: Floor Brackets , (2)

Fastener Required: 3/8" dia. lag screw

1. Determine the final location of the stove and use the leveller screws to plumb and level the stove.
2. Mount the floor brackets over the leveller screws at rear and front locations at opposite corners and secure each to the floor using a 3/8" dia. lag screw of appropriate length, (not supplied).

Figure 24.
Floor Bracket Detail

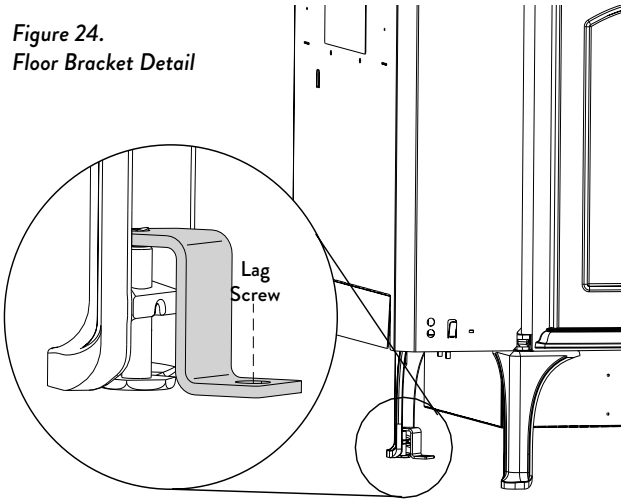

8.0 Appendix

8.1 F 35 Start-Up and Refueling

Follow these directions to get the best emissions performance from your F 35:

Cold Start

Use the following technique for the best start from a "cold" stove:

1. Cut and split approximately 15 kindling pieces 16 inches long. Half of them should be approximately 3/4 inch square, the rest 1/2 inch square. The kindling should be very dry and weigh approximately 3 lbs.

2. Cut and split approximately 15 start-up fuel pieces 16 inches long. Half of the pieces should be larger cross-section (approximately 1 1/2 inches square) and the rest smaller cross-section (approximately 1 inches square). These can be split from larger fuel pieces that are in the range of 19-25% moisture (Dry-basis). The total weight of the start-up fuel should be approximately 4.5 lbs.

3. Arrange the start-up fuel pieces in a grid as shown in figs. 24-28. Place two of the larger pieces about six inches apart going front to back. Next, two more pieces the same size left to right about six inches apart. See fig. 24. Place about seven of the small pieces front to back on top of the gird. Place the remaining start up fuel sideways on top. See figs. 25-26.

4. Next, arrange the kindling pieces in a similar alternating grid pattern with the larger pieces first followed by the smallest with a layer of three pieces going left to right as shown with six or seven pieces on the top. See fig 27.

5. To start, make sure the air control is pushed all the way to the right.

6. Using a propane torch, light the top front of the kindling grid. The torch should be operated for 60 seconds.

7. Close the door until it hits the latch. This will leave the door in a slightly open position.

8. After one minute, close the door fully and secure the door latch.

9. Make sure the air control is still in the maximum open position.

Figure 24.
Arrange larger fuel start-up pieces on bottom

Figure 25.
Arrange smaller fuel start-up pieces on top of grid

Figure 26.
Arrange remaining fuel start-up pieces

Figure 27.
Arrange kindling in grid pattern on top

Adding the High Fire fuel load

1. When the kindling and start-up fuel have burned down by approximately 2/3, rake the remaining coals and fuel pieces forward until they are equally distributed and level.

2. Place the largest fuel piece in the center of the firebox with two smaller pieces on the either side packed tightly together and making sure there is space on both sides of the load for good air flow. Place the remaining pieces on top of the bottom pieces. All fuel pieces should be in a front-to-back orientation. Air control should be set to maximum open (all the way to the right).

Medium Fire Fueling and Operation (loading on coals after High Fire operation):

1. At the end of the high fire rake the remaining coals forward until they are equally distributed and level across the firebox.

2. Place the largest piece in the center of the firebox with two smaller pieces on either side, packed tightly together making sure there is space on both sides of the load for good air flow. Place the remaining pieces on top. All fuel pieces should be in a front-to-back orientation.

3. Immediately close the load door and set the air control to maximum open (all the way to the right).

4. After 5 minutes set the control to the medium air flow position in the center of its range of travel

Low Fire Fueling and Operation (loading on coals after High Fire operation):

1. At the end of a high fire, rake the remaining coals forward until they are equally distributed and level across the firebox.

2. Place the three largest pieces in first; they should be close together. Place the remaining pieces on top of the first in the same way.

3. Immediately close the door and open the air control to maximum open (all the way to the right).

4. Leave the air control on the maximum setting for 10 minutes and then set it to medium. After 5 minutes at medium, push the air control all the way to the left for a controlled low burn.

9.0 Jøtul F 35 Illustrated Parts

Only use replacement parts provided through your authorized Jøtul dealer.

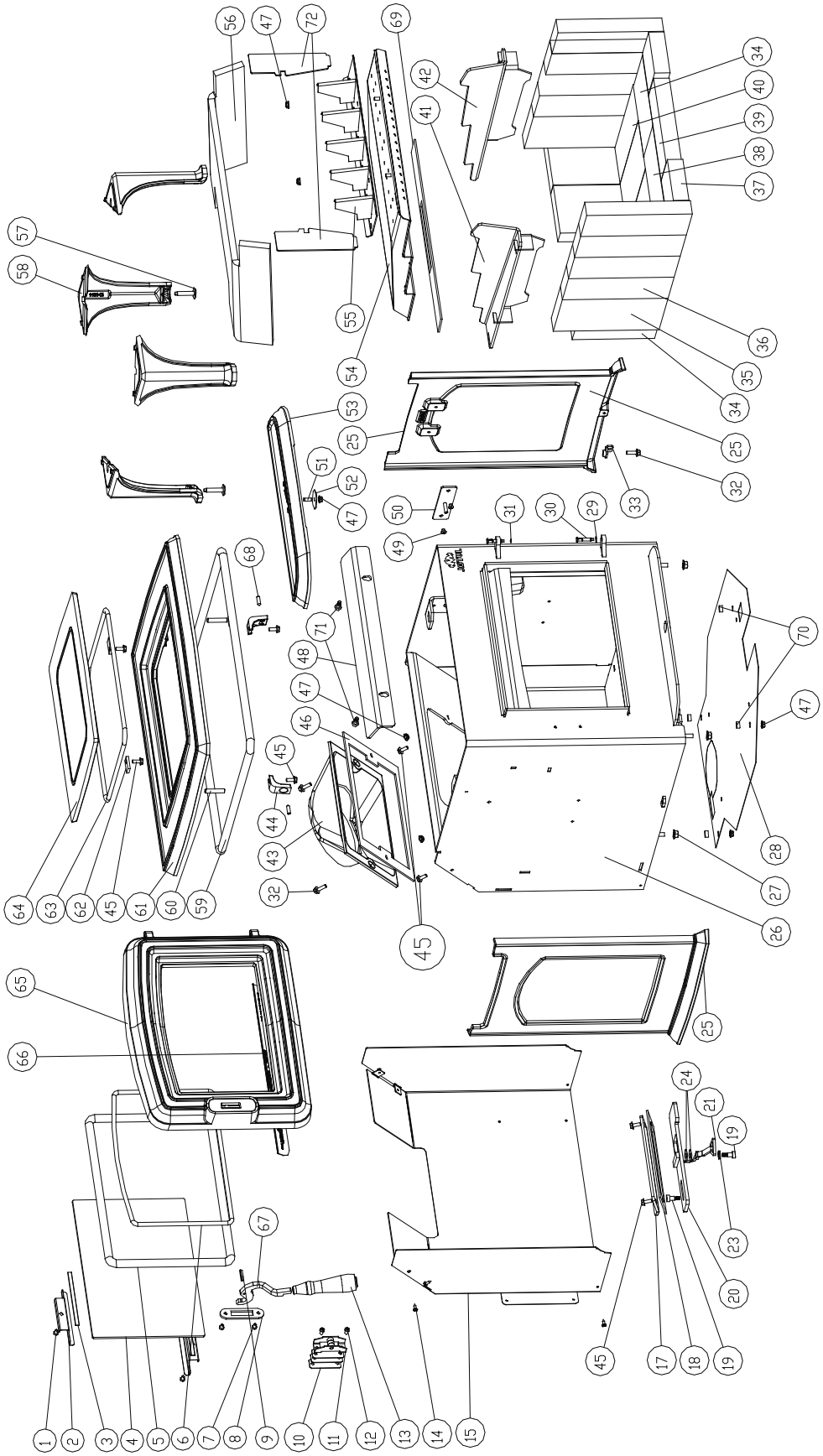

Figure 35. F 35 Illustrated Parts List

No.	Description	Part Number
1.	Screw, Button Head Socket - M6 x 10 Blk	117978
2.	Glass Clip, 5" (three)	225008
3.	Gasket, Flat, V125x8mm (1/8"x5/16"), Self Adhesive	127215
4.	Door Glass, Ceramic	224923
5.	Gasket, MD .625 Ø Fiberglass Rope	223858
6.	Gasket, LD .250 Ø Fiberglass Rope	200024
7.	Screw, Button Head Socket M6 x 10 mm Blk	117978
8.	Retainer, Front Door Latch	224159
9.	Roll Pin, Slotted 5mm x 24, steel	118251
10.	Shim, Latch Receiver	224734
11.	Latch Receiver, Front Door	224733
12.	Screw, Button Head Socket, M6 X 14, Blk	118215
13.	Front Door Tool	157635
14.	Screw, HWH SMA 8 x 1/2 SL Blk Oxide	117917
15.	Rear Shroud, F 45 V2	22491892
17.	Inspection Cover, F 45	224924
18.	Gasket, Inspection Cover	224355
19.	Screw, Shoulder M6 x 10, 8mm dia. x 10 mm, Hex	117982
20.	Air Valve Weldment	223729
21.	Air Valve Handle Ass'y, Nickel Plated	157391
23.	Disc Spring,	118249
24.	Washer, Fender 8mm Zinc	117949
25.	Side Panel, Convection, MB D&T	158266
26.	Firebox assembly	226743
27.	Nut, M8, Serrated Flange, DIN 6923 St8.8 / ANSI B 18.2	117881
28.	Heat shield, Bottom	22675192
29.	Washer, Thin Shim	117588
30.	Hinge pin, New Style, Nickel Plate	125960
31.	E Clip	118261
32.	Bolt, Hex Serrated Flange M6 x 20 Blk	117117
33.	Bracket, Bottom, Cast Convection Panel, 50 TL	224197
34.	Brick, Refractory, 6.625 x 4.50	224723
35.	Brick, Refractory, 8.5" x 4.5" x 1.25"	221751
36.	Brick, Refractory, 8.5" x 3" x 1.25"	221752
37.	Brick, Refractory, 4" x 3"	224175

No.	Description	Part Number
38.	Brick, Refractory, 4.50" x 9" x 1.25"	129082
39.	Brick, Refractory, 8" 2.5" x 1.25"	226871
40.	Brick, Refractory, 9" x 3.375" x 1.25"	222226
41.	Baffle Support, Left	226752
42.	Baffle Support, Right	226753
43.	Smoke outlet, MB	105055
44.	Bracket, Cast Top Retaining	103713
45.	Bolt, Hex Head Serr Flange M6x16 8.8 Blk	99625
46.	Gasket, Flue Collar, F35	226874
47.	Nut, M6 Serrated Flange plain	117968
48.	Deflector, Exhaust	226464
49.	Screw, Button Head Socket, M6 X 6, Blk	118170
50.	Bracket, Top, Cast Convection Panel	226582
51.	Screw, Socket Set, M6 x 16	118031
52.	Washer, Fender .250 x 1.500 dia.	118029
53.	Ash Lip, MB D&T	157645
54.	Baffle Weldment, F 35	226754
55.	Turbulator Assembly	226755
56.	Blanket, F35 Ceramic Fiber	226872
57.	Leveler Bolt, M8	118047
58.	Leg, Steel Stoves, MB, D&T	157346
59.	Gasket, MD, .625 Ø Fiberglass Rope	223858
60.	Set Screw, M8 x 40, Hex Socket, Steel, Black, DIN 916	118245
61.	Top Plate, Front, F 45, MB, D&T	157655
62.	Clip, Side	120120
63.	Gasket, LD 250 Fiberglass Rope	200024
64.	Top Cover, MB, D&T	157647
65.	Door, Front, w/Gasket, F 45, MB	157648
66.	Safety Warning Plate	226905
67.	Latch, Front Door w/ Roll Pin	224979
68.	Screw, Socket Set, M6 x 20	117835
69.	Gasket, Secondary Ledge	225021
70.	Spacer, .250 x .500	117994
71.	Bolt, shoulder, M6 x 6	118244
72.	Deflector, Side	226870

This page is intentionally blank.

10. F 35 Warranty Statement

Effective January 1, 2013

This warranty policy applies to wood-burning products identified by Jøtul trade names, as set forth below.

A. LIMITED LIFETIME WARRANTY, parts only:
Jøtul North America Inc. (JØTUL) warrants, to the original retail purchaser, that those baffle and air manifold components of the Jøtul Stove or Fireplace Insert specified above will be free of defects in material and workmanship for the life of the product. This warranty is subject to the terms, exclusions and limitations set forth below.

B. LIMITED FIVE YEAR WARRANTY - Cast Iron and Steel Components:
JØTUL warrants, to the original retail purchaser, that those components of the Jøtul or Scan Stove or Fireplace Insert specified above will be free of defects in material and workmanship for a period of five (5) years from the date of purchase. This warranty is subject to the terms, exclusions and limitations set forth below.

C. LIMITED TWO YEAR WARRANTY - Enamel Finish:
JØTUL warrants, to the original retail purchaser, the enamel finish on cast iron components of the Jøtul Stove or Fireplace Insert specified above against peeling or fading for a period of two (2) years from the date of purchase. This warranty is subject to the terms, exclusions and limitations set forth below.

D. LIMITED ONE YEAR WARRANTY - Electrical Components (blowers, thermostatic switches):
JØTUL warrants, to the original retail purchaser, that those components of the Jøtul or Scan Stove or Fireplace Insert specified above will be free of defects in material and workmanship for a period of one (1) year from the date of purchase. This warranty is subject to the terms, exclusions, and limitations set forth below:

JØTUL will repair or replace at its option, any of the above components determined by JØTUL to be covered by this warranty. You must, at your own expense, arrange to deliver or ship the component to an authorized Jøtul dealer and arrange for pick-up or delivery of the component after repairs have been made. If, upon inspection, JØTUL determines that the component is covered by this warranty, the repair or replacement will be made as set forth above. This warranty is not transferable and is extended only to, and is solely for the benefit of, the original retail purchaser of the Jøtul Stove or Fireplace Insert. This paragraph sets forth the sole remedy available under this warranty in the event of any defect in the Jøtul Stove or Fireplace Insert. The warranty period for any replaced component will be the remaining unexpired portion of the warranty period for the original component.
Please retain your dated sales receipt in your records as proof of purchase.

EXCLUSIONS AND LIMITATIONS

NOTICE: This warranty is void if installation or service is performed by someone other than an authorized installer or service agency, or if installation is not in conformance with the installation and operating instructions contained in this owners manual or local and/or national fire and building regulations. A listing of local authorized installers, service agencies and gas suppliers can be obtained from the National Fireplace Institute at http://www.nficertified.org/.

This warranty does not cover the following parts or conditions:

1) Repair or replacement of parts that are subject to normal wear and tear during the warranty period or to parts that may require replacement in connection with normal maintenance. These parts include paint, gaskets, burn plates, fire-bricks, fire grates, ceramic insulation blankets or glass (glass is warranted only against thermal breakage).
2) Damage due to incorrect installations not in conformance with the installation instructions contained in this owners manual or local and/or national fire and building regulations.
3) Damage, including damage to enamel surfaces, caused by improper operation, over-firing, and/or misuse. Improper operation, such as burning the stove with the ash door open, can damage the stove.

   Over-firing occurs when any part of the stove glows red. Over-firing can also be identified by warped plates, rust-colored cast iron, paint pigment that has turned dusty white, or bubbling, cracking and discoloration of the enamel finish. Misuse includes, without limitation, use that is not in conformance with the operating instructions contained in this owners manual.
4) Damage due to, or repair of, rust. Use of stove-top steamers may cause rust.
5) Damage due to service performed by an installer or service agency, unless otherwise agreed to in writing by JØTUL.
6) Damage caused by unauthorized modification, use or repair.
7) Costs incurred by travel time and/or loss of service.
8) Labor or other costs associated with the repair of components beyond the warranty period.
9) Damage incurred while the Jøtul Stove or Fireplace Insert is in transit.

IN NO EVENT SHALL JØTUL, ITS PARENT COMPANY, SHAREHOLDERS, AFFILIATES, OFFICERS, EMPLOYEES, AGENTS OR REPRESENTATIVES BE LIABLE OR RESPONSIBLE TO YOU FOR ANY SPECIAL, INDIRECT, INCIDENTAL, CONSEQUENTIAL, PUNITIVE OR OTHER SIMILAR DAMAGES, INCLUDING, BUT NOT LIMITED TO, LOST PROFITS, LOST SALES, INJURY TO PERSON OR PROPERTY, OR DAMAGES TO A STRUCTURE OR ITS CONTENTS, ARISING UNDER ANY THEORY OF LAW WHATSOEVER. ALL IMPLIED WARRANTIES, INCLUDING THE IMPLIED WARRANTIES OF MERCHANTABILITY AND FITNESS FOR A PARTICULAR PURPOSE, OR OTHERWISE, ARE LIMITED IN DURATION TO THE LENGTH OF THIS WRITTEN WARRANTY. EXCEPT AS EXPRESSLY SET FORTH HEREIN, JØTUL MAKES NO ORAL, WRITTEN OR OTHER WARRANTY WITH RESPECT TO JØTUL OR SCAN STOVES OR FIREPLACES.

Some states do not allow the exclusion or limitation of incidental or consequential damages, or limitations on the length of implied warranties. Therefore, the above exclusions or limitations may not apply to you. This warranty gives you specific legal rights, and you may have other rights, which vary from state to state.

JØTUL reserves the right to discontinue, modify or change the materials used to produce the Jøtul Stove or Fireplace. JØTUL shall have the right to replace any defective component with substitute components determined by JØTUL to be of substantially equal quality and price.

The dollar value of JØTULs liability for breach of this warranty shall be limited exclusively to the cost of furnishing a replacement component. JØTUL shall not in any event be liable for the cost of labor expended by others in connection with any defective component. Any costs or expenses beyond those expressly assumed by JØTUL under the terms of this warranty shall be the sole responsibility of the owner(s) of the Jøtul Stove or Fireplace Insert.

No dealer, distributor, or other person is authorized to modify, augment, or extend this limited warranty on behalf of JØTUL. NO MODIFICATION OR CHANGE TO THIS WARRANTY WILL BE EFFECTIVE UNLESS IT IS MADE IN A WRITTEN DOCUMENT MANUALLY SIGNED BY AN AUTHORIZED OFFICER OF JØTUL.

An authorized installer may have been provided with certain information related particularly to the Jøtul Stove or Fireplace Insert; however, no authorized installer or other person who may service the appliance is an agent of JØTUL. No inference should be made that JØTUL has tested, certified, or otherwise pronounced any person as qualified to install or service the appliance. JØTUL shall not be liable or otherwise responsible for any error or omission by a person installing or servicing a Jøtul Stove or Fireplace Insert.

If you believe your Jøtul or Fireplace Insert is defective, you should contact your nearest authorized Jøtul dealer, who will process a warranty claim. IN ORDER TO QUALIFY FOR WARRANTY COVERAGE, JØTUL MUST RECEIVE NOTICE OF A POSSIBLE DEFECT WITHIN SIXTY (60) DAYS OF THE DATE THE DEFECT IS FIRST DISCOVERED, OR REASONABLY COULD HAVE BEEN DISCOVERED.

This warranty is given by Jøtul North America, Inc.,
55 Hutcherson Drive, Gorham, Maine 04038 USA

130074_1
September 2021

Quality

We appreciate your trust in welcoming our product into your home and invite your comment and appraisal of our efforts to provide you with the finest in home hearth products.

Jøtul pursues a policy of continuous product development. Products supplied may therefore differ in specification, colour and type of accessories from those illustrated and described in this manual.

Jøtul North America Inc.
P.O. Box 1157
55 Hutcherson Drive
Gorham, Maine 04038
USA

Jøtul AS
P.O. Box 1411
N-1602 Fredrikstad,
Norway

www.jotul.us

APPENDIX 8: Photographs of test set up

Dilution picture Dia 8

Picture 1: Sampling system

1 : 8 in dia Stainless steel pipe

2 : 16 in. Between sampling probe and lower elbow

3 : Air intake with damper to adjust flow rate

4 : Exhaust blower

Picture 2: Hood

5 : 8 in. dia. Stainless steel pipe

6 : na

7 : 10 feet long between velocity port and upper elbow

8 : 48 in. dia. Galvanized steel smoke captures hood

Picture 3: Stack sampling

Picture 3.1: Gas analysis and temperature probe

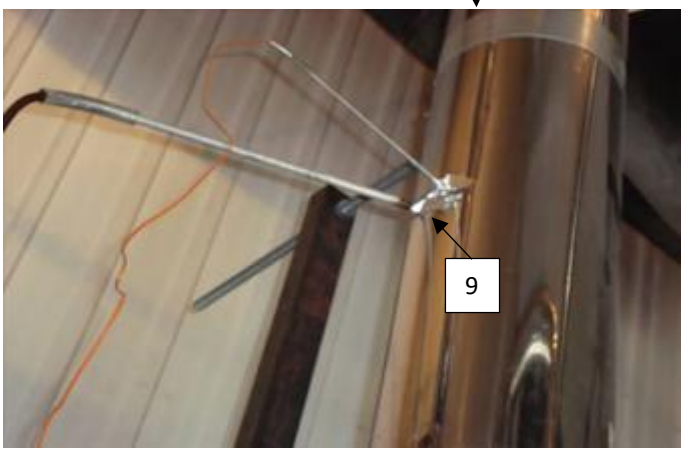

Picture 3.2: chimney support

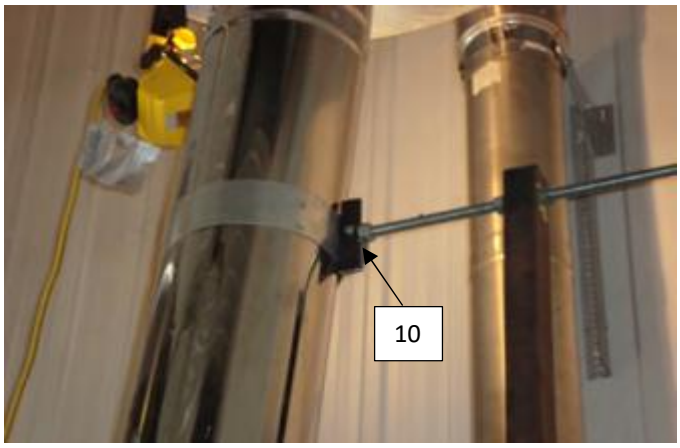

9 : Temperature and gas analyser sampling ports located 9 feet above platform

10 : Exhaust system support bracket

Picture 4: Tunnel flow measurement and sampling probe

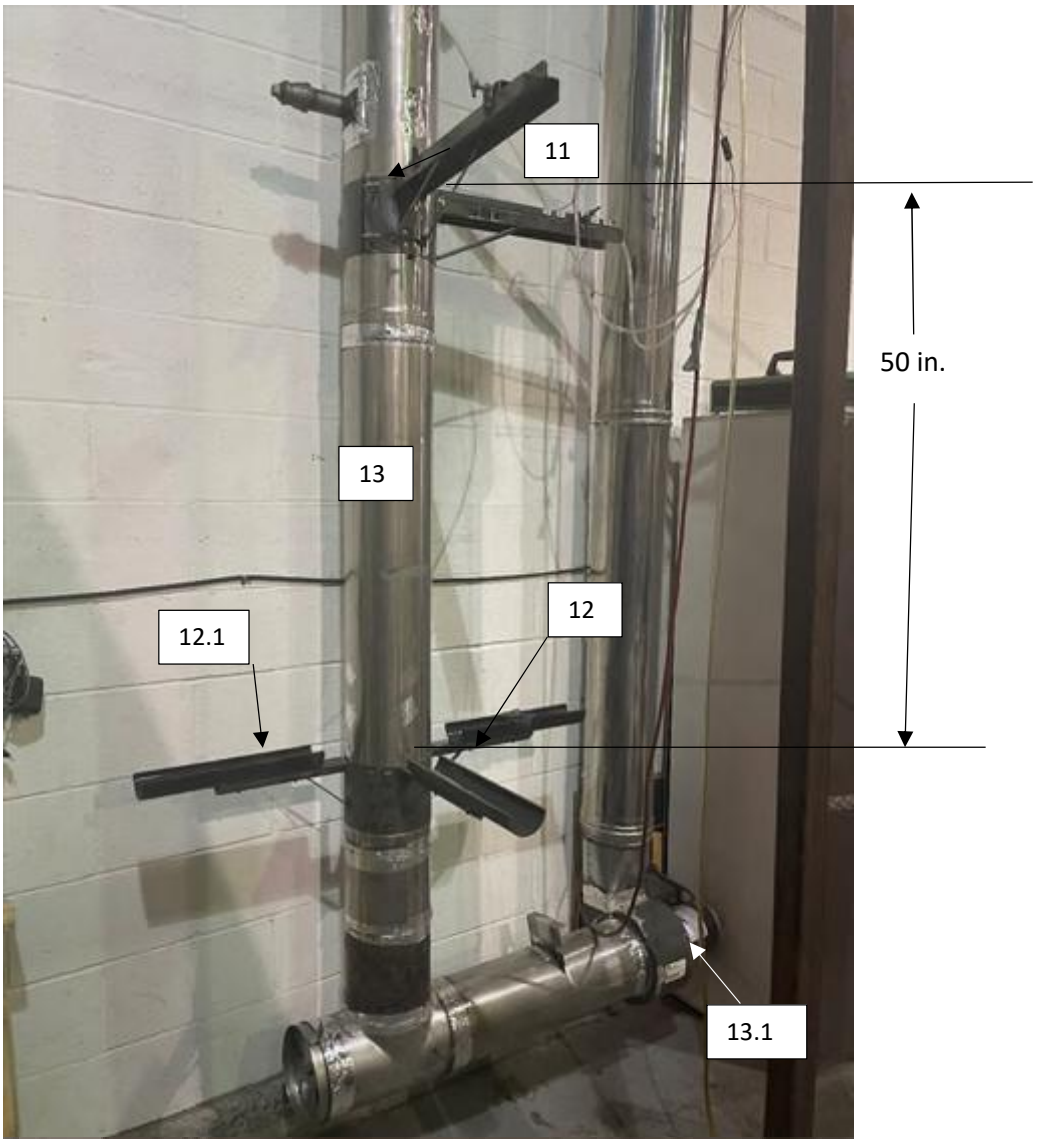

11: Velocity port

12: Sampling port, 2 sampling probes with 2x47 mm. dia.filter each.

12.1: Sampling port, sampling probes with 2x47 mm. dia.filter each., for first hour sampling

13:18 feet long dilution tunnel

13.1: Extraction blower

Picture 5: Draft sampling

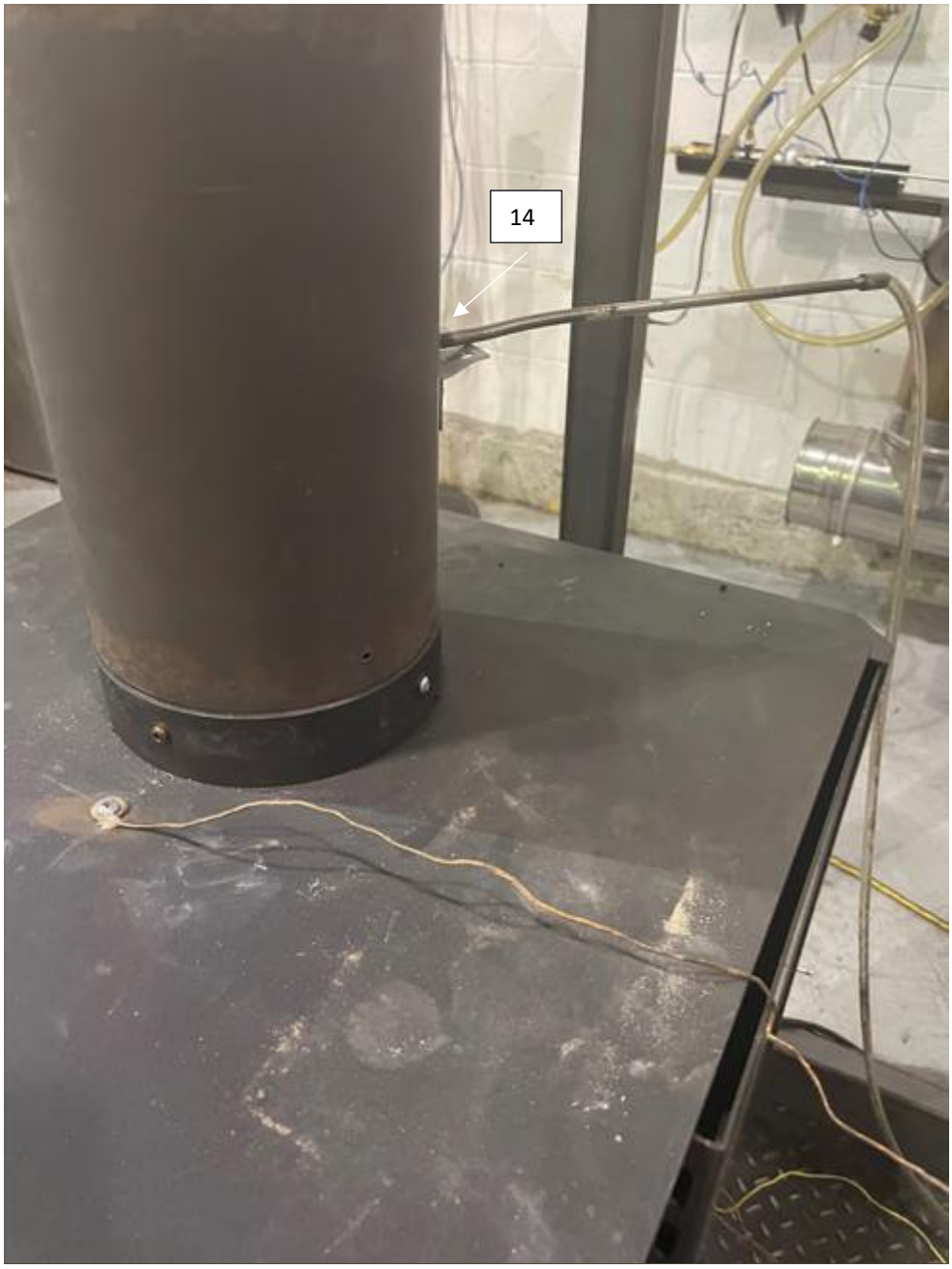

14 : Draft sampling port located 6 in.from the flue outlet

Picture 6: Equipments

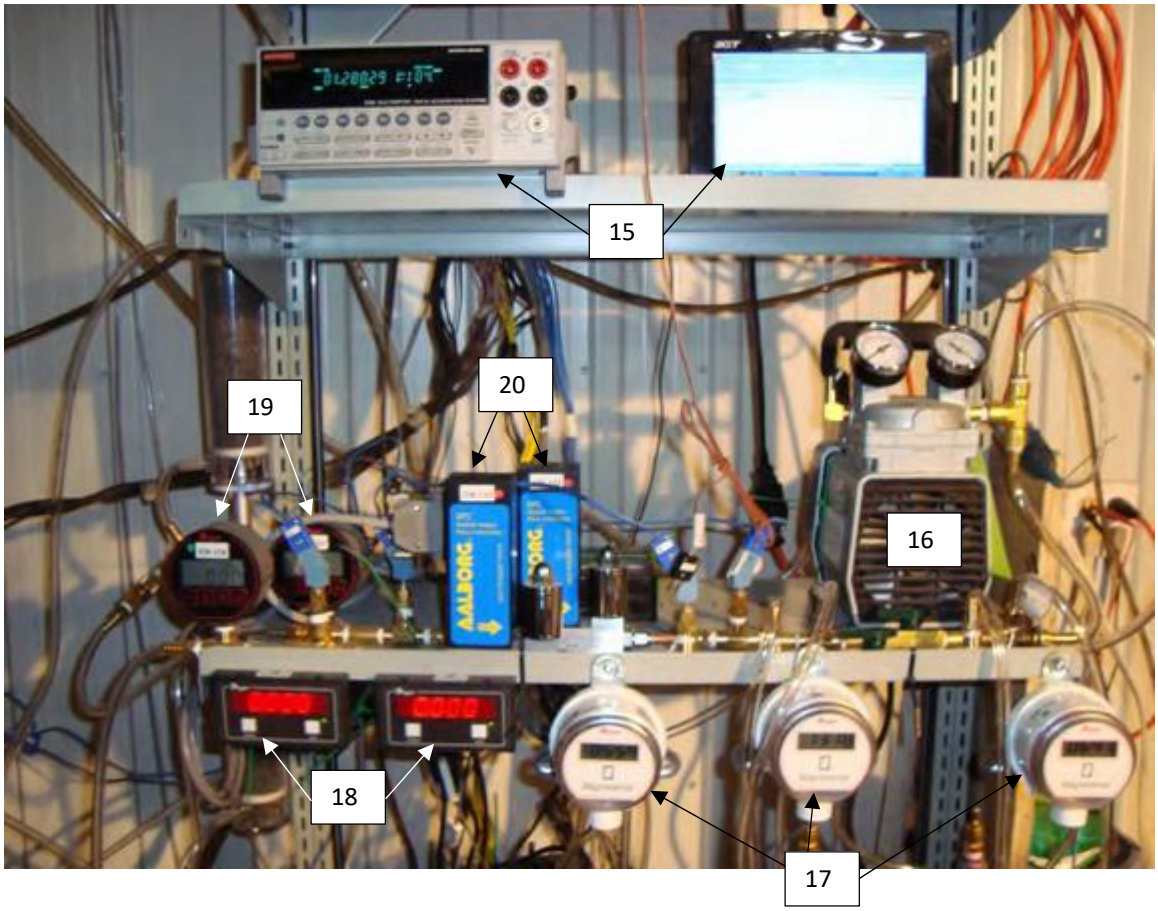

15 : Acquisition system

16 : Vacuum pump

17 : Digital manometer

18 : Digital read out for mass flow meter

19 : Digital vacuum gage

20 : Mass flow meter

Picture 7: Gaz analyser

Picture 8: Reference dry gas meter

Picture 11: Dry gas meter

Picture 12: Dilution tunnel sample system

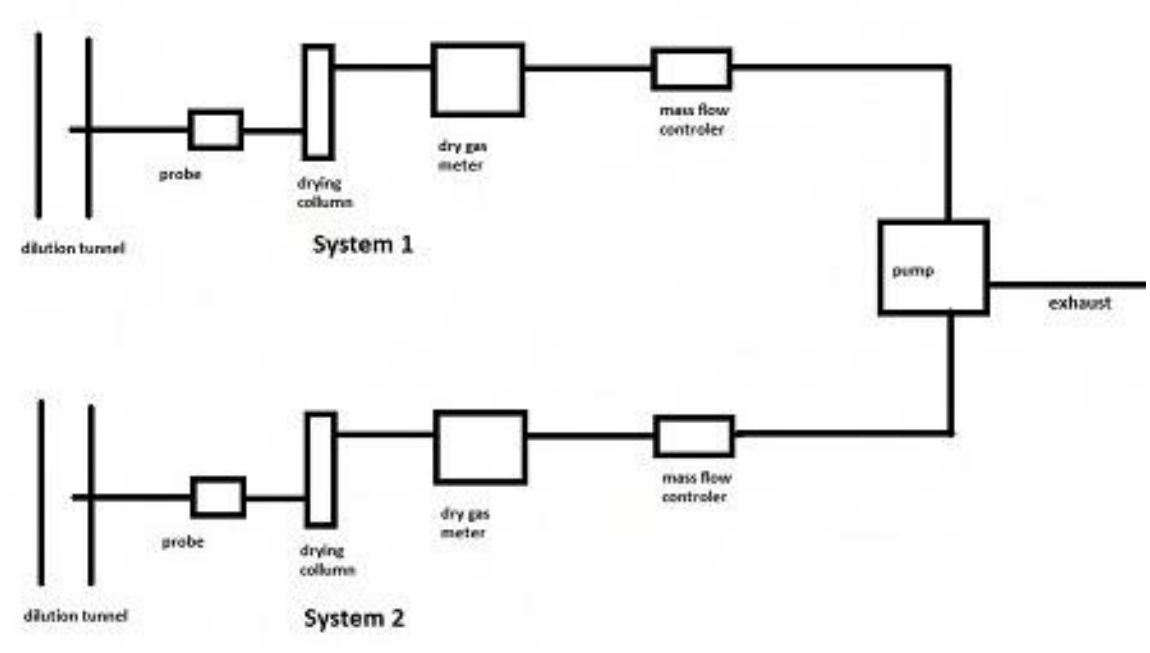

Picture 13: Dilution tunnel

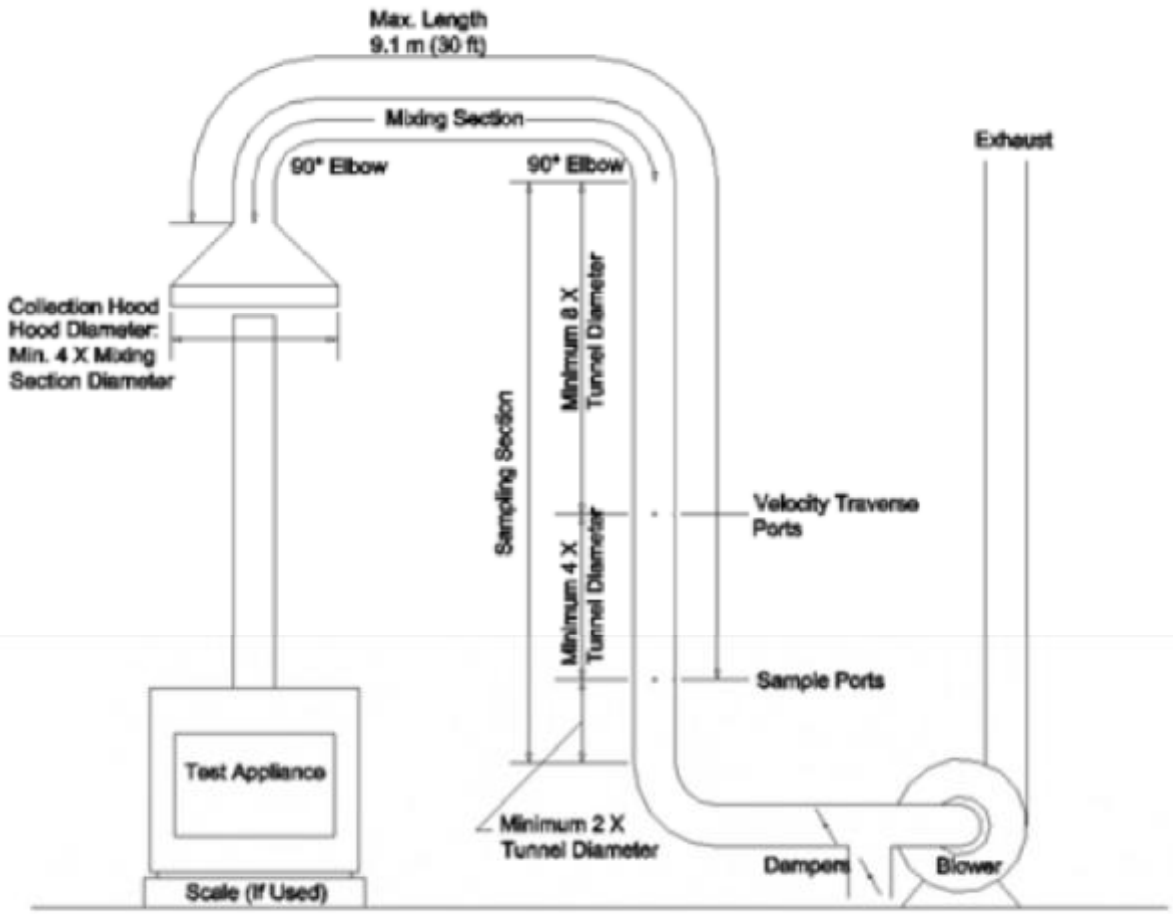

FIG. 3 Steel-Constructed Dilution Tunnel Apparatus

APPENDIX 9: Test load photographs

POLYTESTS
TESTING THROUGH YOUR REALITY

Run 1.1 maximum burn rate February 23rd 2021

Test load

Test load

Coal bed

Load in the stove

POLYTESTS
TESTING THROUGH YOUR REALITY

Run 1.2 minimum burn rate February 23rd 2021

Test load

Test load

Coal bed

Load in the stove

Run 2.1 Medium burn rate February 24th 2021

Test load

Test load

Coal bed

Load in the stove

POLYTESTS
TESTING THROUGH YOUR REALITY

Back view stove 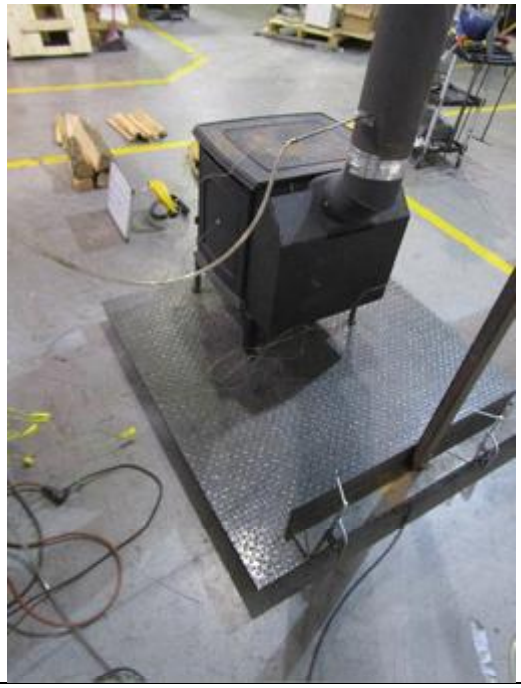	Kindling 
Back and side view of stove 	Side view of stove 

APPENDIX 10: Laboratory Operating Procedures

POLYTESTS Services inc.

SFBA EMISSIONS AND EFFICIENCY TESTING LABORATORY OPERATING PROCEDURE

INTRODUCTION

This document provides a step by step guide for the technician conducting tests to EPA standard requirements. Procedures outlined here, when followed, will result in tests in conformance with EPA Methods 28R, ASTME2780, ASTME2515, ASTM E2618, Method 28WHH, Method 28 PTS, Method ALT-125, ASMTE 3053.

The primary measurements to be made are particulate emissions rates. The technician's duties include the following steps.

1. Incoming inspection of test units.
2. Set-up of test units.
3. Preliminary testing to establish unit operating procedures and familiarity with operating controls.
4. Calibration of test equipment.
5. Set-up, checking and operation of sampling apparatus.
6. Conduct of tests including complete record keeping and data recording for non-automated functions.
7. Operation of hardware and software included in automatic data acquisition system.
8. Review and analysis of data at test completion to ensure test validity.

The technician running this test must be familiar with the following documents, which are to be kept in the laboratory at all, times.

EPA METHODS

1. EPA METHODS 28R
2. ASTME2780
3. ASTME2515
4. ASTM E2618
5. METHOD 28WHH
6. METHOD 28 PTS
7. ALT-125
8. ASMTE 3053

I. APPLIANCE INSPECTION AND SET-UP

A. INCOMING INSPECTION

1. Check for completeness of unit including parts, accessories, installation and operating instructions, drawings and specifications etc. Note any discrepancies or missing parts or information.
2. Check for shipping damage. If damage has occurred, notify the laboratory manager. In some cases, repairs may be made, provided the manufacturer and laboratory manager concur that repairs will not affect the unit's performance. If damage is irrepairable, a new unit will need to be obtained.
3. Note whether unit is catalytic of non-catalytic.
4. Mark unit with manufacturer's name, model number, work order number and date received.
5. If unit is safety listed, note label data including listing agency and serial number. If unit is not listed, mark all data sheets "UNLISTED". Test results will not be released until unit passes safety tests without modification unless authorized by laboratory manager.

B. UNIT SET-UP

1. All new units must be operated for a breaking in period as follows.

    a) Non-catalytic units: Ten (48) hours at medium burn rate with Douglas Fir scrap or cordwood.
    b) Catalytic units: Fifty (50) hours at medium burn rate with Douglas Fir scrap or cordwood.

    During these break-in runs the unit may be connected to a lab chimney and fuel additions noted into the corresponding data acquisition file. For catalytic units, a thermocouple must be installed in the catalyst.

    Record catalyst temperature at 1-hour intervals or on chart recorder. Operating should continue until data shows at least fifty (50) hours of operation with catalyst temperature in excess of 500 degrees Fahrenheit (active range).

    For non-catalytic units a stack thermocouple should be installed and stack temperature recorded at 1-hour intervals. Fourthy-height (48) hours minimum burn time with a stack temperature of at least 250 degrees Fahrenheit is required.

    Once break-in is completed, allow unit to cool. Clean unit thoroughly.

2. Unit is to be placed on scale for testing. Prior to proceeding with verification process, scale should be turned on and allowed to warm up for one (1) hour minimum. Zero scale and check calibration with standard weights. One (1) 1 kg weight and one (1) 2 kg weight are provided for this purpose. Use scale verification test form no. EPA-7-TP to record results. If scale fails to reproduce weights within tolerance, check with laboratory manager before proceeding.
3. If scale checks out, place unit on scale and align so chimney will be centered in hood.
4. Attach chimney connector and chimney. Be sure all joints are sealed below sampling points. Chimney and connector should be cleaned with a wire brush. Be sure chimney connector terminates and chimney starts at proper level above scale platform. Chimney must be supported from scale so that it does not touch test enclosure or hood walls.
5. Thermocouples should be attached to surfaces of unit prior to testing. EPA requires a thermocouple on the bottom of the firebox. This must be installed prior to putting the unit on the scale. In some cases, the required thermocouple locations will be inaccessible on finished units. These units should have thermocouples installed by the manufacturer during construction. Check with the laboratory manager if problems are encountered in proper thermocouple attachment.
6. Measure firebox dimensions and record on data forms nos. EPA-2-TP. Make a three-dimensional sketch of the firebox including firebrick, baffles and obstructions. Calculate firebox volume in cubic feet with both addition and subtraction methods using forms nos. EPA-3-TP and EPA-4-TP. See Section 6.2.4 of EPA Method 28 for details of firebox volume determination.
7. If unit is catalytically equipped, additional thermocouples must be installed upstream and downstream of catalyst. Thermocouples should also be placed in the primary and secondary combustion chambers of all units.
8. Plug thermocouples into data acquisition system jacks making a check of locations and jack numbers for each test on data form no. EPA-5-TP.
9. Note that inserts are tested as if they are freestanding stoves.
10. Dilution tunnel should be cleaned prior to each certification test series and at anytime a higher burn rate follows a lower test burn rate.

II. SAMPLING SYSTEM – SET-UP

A. GAS ANALYSIS

1. Instruments should be turned on and allowed to warm up for one (1) hour minimum.

2. Calibrate analyzers as follows:

NOTE : Prior to proceeding with calibration, make sure to use NIST tracable calibration gas bottles. Adjust flow meter if necessary at each instrument to required flow value.

a) Using span gas, adjust span control to values specified on calibration gas label.
b) Using nitrogene, adjust zero controls to provide a 0.00 analyzer readout.

c) Repeat a) and b) until no further adjustment is required.
d) Check readout vs. calibration gases (2) labels.

The CO_2 and CO analyzers are "ZEROED" on nitrogen. The O_2 analyzer is spanned on air and set for 20.9%. It is zeroed on nitrogen as well.

3. Check for response time synchronization.

a) With no fire in unit, allow reading to stabilize (O_2 should be 20.93, CO and CO_2 should equal O).
b) Flow the calibration gas in the unit and start stop watch. Note the time required for each unit to reach .90 of the calibration gas bottle value. If all three analyzers reach this value within 15 seconds of each other, synchronization is adequate. If not, contact the laboratory manager. Synchronization is adjusted by internal instrument setting.

4. Set-up sample clean-up and water collection train as follows.

a) Load impingers as follows:
Impinger #1: 100 ml distilled water and 5 ml H_2SO_4
Impinger #2: 100 ml distilled water and 5 ml H_2SO_4
Impinger #3: Empty
Impinger #4: 200 – 300 grams silica gel (dry)

b) Place impingers in container and connect with "U TUBES". Grease carefully on bottom half of ball joint so that grease will not get into tubes.

c) Connect filter to first impinger and sample line to last impinger.

e. Leak check system as follows.

1) Plug probe.
2) Turn on sample system.
3) Observe sample flow rotometer and vacuum gauge. If necessary, use vacuum; adjust valve to set vacuum to the maximum inches Hg.
4) If the float in rotometer does not stabilize below 10 on scale, system must be resealed.
5) Repeat leak check procedure until satisfactory results are obtained.

f) Just prior to starting test, fill impinger container with water and ice and record ambiant conditions on data form no. EPA-8-TP.

B. DILUTION TUNNEL SAMPLE TRAIN SET-UP

1. Filters and holders.

a) Clean probes and filter holder front housings carefully and desiccate for at least 24 hours prior to use.

b) Filters should be numbered and filter and probe combinations labeled prior to use.

c) Weigh desiccated filters and probe-filter units on analytical balance. Record weights data form no. EPA-10-TP. Note that probe and front half of front filter are to be weighed as a unit.

d) Carefully assemble filter holder units and connect to sampling systems. Check "DRIERITE" columns for adequate dry absorbent (blue).

2. Leak checking.

a) Each sample system is to be checked for leakage prior to inserting probes in tunnel.

b) Plug probes and start samplers, adjust pump bypass valve to produce a vacuum reading of 5 inches Hg. (NOTE: During test, vacuum must not exceed 5 inches unless posttest leak check shows acceptable results.)

c) Allow vacuum indication to stabilize for two (2) minutes, then record time and dry gas (DGM_1) and (DGM_2) meter readings. Wait ten (10) minutes and record dry gas meter readings again (DGM_3, DGM_4). NOTE: If mark, system is leaking too much and all seals should be checked.

d) Calculate leakage rate as follows.

1) System 1: $\frac{(DGM_3 - DGM_1)}{10} = CFM_1$

2) System 2: $\frac{(DGM_4 - DGM_2)}{10} = CFM_2$

If CFM_1 or CFM_2 is greater than .02 CFM, leakage is unacceptable and system must be resealed.

If CFM_1 or CFM_2 is greater than 0.04 X sample rate, leakage is unacceptable. For most tests, the sample rate will be about 0.15 CFM, thus leakage rates in excess of 0.04 X 0.15 = 0.006 CFM are not acceptable. Record leakage rates on form no. EPA-5-TP

e) Once leakage check is satisfactory, unplug probe and set flow to appropriate rate for test. This should be done in the minimum amount of time necessary and with the probes in ambient air. Do not insert probes in tunnel until the start of the test run. When flow is established, replug probes to prevent contamination.

III. TEST CONDUCT

A. FUEL LOAD

1. Determine optimum load weight by multiplying firebox volume in cubic feet by 7 or (10 and 12 for cordwood method). This is the load weight on an as-fired basis.
2. Determine piece size to obtain the requested load configuration and meet the test load weight criteria. The load should consist of the following: **TO BE DETERMINED**
3. Weigh out test load and adjust weight by shortening all pieces equally if necessary. Record individual piece load on form no. EPA-11-TP.

4. Measure and record moisture content of each fuel piece using Delmhorst moisture meter. Determine if fuel load moisture content is in required range. If not, construct new load using wood with required moisture content. All wood in the humidity chamber should be within range. Contact project manager if you cannot find suitable pieces. Record moisture of each individual piece load on form no. EPA-11-TP.

B. UNIT START-UP

1. Before lighting a fire, turn on dilution tunnel and set tunnel velocity to 500ft/min Record readings on data form no. EPA-9-TP.
2. Check draft imposed on cold stove with all inlets closed and a draft gauge in the chimney. If draft is greater than 0.005 inches water column, adjust tunnel to stack gap until draft is less than 0.005.
3. Check for ambient airflow around unit with hot wire anomometer. Must be less than 50 ft/min.
4. Check all equipment for proper operation. Analyzers should be on and in sample mode. Computer should be loaded with test program and awaiting test start command.
5. Zero scale and start fire with uncolored newspaper and kindling representing 10 % of test load with the same type of fuel.
6. Once kindling is burning well after 5 minutes, add splitted pieces having a bottom surface around 4 sq. inches and representing 25% of test load weight. Operate at high fire for 15 minutes. Then adjust settings to intended test run levels as per the manufacturer's.
7. Following addition of pretest fuel load (splitted pieces), start computer for data logging.
8. All fuel additions, air intake settings and operational characteristics shall be noted with associated time stamp on form no. EPA-1-TP.

C. TEST RUN

1. Once the targeted test fuel bed weight is obtained, the test is to be started as follows:

   a) Insert the sample probes into the tunnel being careful not to hit sides of tunnel with probe tip.
   b) Check tunnel pitot tube for proper position. (Pitot should be carefully cleaned prior to each test.)
   c) Turn on probe sample systems and stack sampler.
   d) Open stove door, rake coals and load stove as follows: **TO BE DETERMINED**
   e) Close door or follow manufacturer's start-up procedures. (Five (5) minutes maximum time before all doors and controls must be set to final positions for duration of test. 15 minutes allowed for ALT-125 method))
   f) An alarm will sound an audible signal at the (10) minutes intervals. This signal a reading interval. You must verify at each interval that the following readings are correctly logged by the data acquisition system and make observations of any unusual or non-routine events that could occur.

      1) Rotometer readings.
      2) Tunnel pitot tube reading.
      (Zero regularly between readings)
      3) Gas meter readings.
      4) Temperature readings.
      5) Draft reading
      6) Test laod weight
      7) CO, CO_2 and O_2 readings
      8) Observations of any unusual or non-routine events.

   g) During the test, any condition approaching unacceptable limits will be noted. The filter probes and housings are installed in small holders just outside the tunnel. If the filter temperature gets too high, you will have to increase the water flow through the cooling unit until acceptable temperatures are obtained. In between readings, check on other equipment. Be sure dryers and filters are working and monitor impinger train for proper water and ice levels etc.

   h) When the fuel charge is consumed, it will signal end of test and shut down the sampling systems. When this occurs,

remove filter holder and probes from tunnel and impingers from sample line.

IV. POST TEST PROCEDURES

A. SAMPLE RECOVERY – FILTER TRAINS

1. Carefully clean outside of probes and filter housings with alcohol.
2. Disassemble filter holder and transfer filters to clean petri dish. Scrape gasket with scalpel and collect any loose material on filters.
3. Place probe and front half of first filter holders (still assembled) and filters in desiccator. Allow 24-hour desiccation before weighing.
4. Weigh probe filter holder units and filters at six (6) hour intervals until weight change between weighings is less than 0.2 mg. Record all weights taken on data form no. EPA-10-TP.

B. CALCULATION OF RESULTS

The computer program carries out all final calculations. When run, it will ask for data from forms used during the test. Enter data as called for.

GENERAL

This guide cannot cover every possible contingency, which may develop during a particular test program. Many questions, which may arise, can be answered by a complete understanding of the test standards and their intent. When in doubt on any detail, check with the laboratory manager and be sure you understand the procedures involved.

It is critical that all spaces on the data forms be properly filled in. Each test must be represented by a complete record of what was done and when.

APPENDIX 11: Sample calculations

Validation du fichier de calcul avec les équations provenant des normes:

ASTM E2515-11
ASTME3053-17

Equation 9,2 (1)

$$M_{fldb} = \sum (M_{flnwb})\,(100)/(100 + MC_{fln}))$$

Nomenclature

M_{FLdb}	Weight of test fuel load, dry basis lb (kg)
M_{FLnwb}	Weight of each test fuel pieces, n, in test fuel load per 8,4,1, wet basis, lb (kg)
MC_{FLn}	Average fuel moisture of test fuel piece, n , in test fuel load % dry basis
n	individual test fuel pieces that comprise the test fuel load, as applicable

Sample calculation

Data

M_{FLnwb}	15,63	lbs
MC_{FLn}	20,69	%
n		
M_{FLdb}	12,95	lbs

Equation 9,2 (2)

$$M_{SUdb} = \sum (M_{SUnwb})\,(100)/(100 + MC_{SUn}))$$

Nomenclature

M_{SUdb}	Weight of startup fuel, dry basis, lb (Kg)
M_{SUnwb}	Weight of each start-up fuel pieces, n, per 8,5,7, wet basis, lb (Kg)
MC_{SUn}	Average fuel moisture of start-up fuel piece, n % bry basis
n	individual startup fuel pieces, as applicable

Sample calculation

Data

M_{SUnwb}	4,50	lbs
MC_{SUn}	20	%
n		
M_{SUdb}	3,75	lbs

Equation 9,2 (3) $$M_{kdb} = (M_{kwb})(100)/(100 + MC_k)$$

Nomenclature

M_{kdb}	Weight of kindling, dry basis lb (kg)
M_{kwb}	Weight of kindling per 8,5,6, wet basis, lb (kg)
MC_k	Average moisture of kindling % dry basis

Sample calculation

Data

M_{kwb}	3,10	lbs
MC_k	9,00	%
M_{kdb}	2,84	lbs

Equation 9,2 (4) $$M_{FREHdb} = M_{RSUBdb} + M_{FLEHdb}$$

Nomenclature

M_{FREHdb}	Total weight of all remaining fuel at end of high fire test run, lb (kg)
M_{RSUBDb}	Weight of risidual start-up fuel bed when high fire test load added, lb(kg)
M_{FLEHdb}	Weight of unburned portion of test fuel load at the end of the high fire test run, lb (kg)

Sample calculation

Data

M_{RSUBDb}	2,70	lbs
M_{FLEHdb}	1,50	lbs
M_{FREHdb}	4,20	lbs

Equation 9,2 (5) $$M_{TFBHdb} = M_{Kdb} + M_{SUdb} + M_{FLdb} - M_{FREHdb}$$

Nomenclature

M_{TBFHdb}	Total weight of all fuel burned during high fire test run lb (kg), dry basis
M_{FREHdb}	Total weight of all remaining fuel at end of high fire test run, lb (kg)
M_{FLdb}	Weight of test fuel load, dry basis lb (kg)
M_{SUdb}	Weight of startup fuel, dry basis, lb (Kg)
M_{kdb}	Weight of kindling, dry basis lb (kg)

Sample calculation

Data

M_{FREHdb}	4,20	lbs
M_{FLdb}	12,95	lbs
M_{SUdb}	3,75	lbs
M_{kdb}	2,84	lbs
M_{TBFHdb}	15,35	lbs

Equation 9,2 (6) $$BR_H = 60(M_{FLdb} - M_{FLEHdb})/\theta_{H1}$$

Nomenclature

BR_H	Dry burn rate for high fire test run, from time when test fuel load added to end of test run
θ_{H1}	Total duration of high fire test run, from time when test fuel load is added to end of test r
M_{FLdb}	Weight of test fuel load, dry basis lb (kg)
M_{FLEHdb}	Weight of unburned portion of test fuel load at the end of the high fire test run, lb (kg)

Sample calculation

Data

θ_{H1}	70	min
M_{FLdb}	12,95	lbs
M_{FLEHdb}	1,50	lbs
BR_H	4,45	kg/hr

For low and medium burn fire test run
Equation 9,2 (7) $M_{TFBdb} = M_{FLdb} - M_{FREdb}$

Nomenclature

M_{TFBdb}	Total weight of fuel burned during low or medium fire test run, lb (kg),dry basis
M_{FREdb}	Weight of remaining fuel at end of low or medium fire test run, lb (kg)
M_{FLdb}	Weight of test fuel load, dry basis lb (kg)

Sample calculation

Data

M_{FREdb}	0,00	lbs
M_{FLdb}	15,25	lbs
M_{TFBdb}	15,25	lbs

Equation 9,2 (8) $BR = 60(M_{MTBdb})/\theta$

Nomenclature

BR	Dry burn rate for low and medium fire test run. lb/hr (kg/hr)
θ	Total duration of low or medium fire test run, min.
M_{TFBdb}	Total weight of fuel burned during low or medium fire test run, lb (kg),dry basis

Sample calculation

Data

θ	405	min
M_{TFBdb}	15,25	lbs
BR_H	1,03	kg/hr

For high test run
Equation 9,2 (9) $PM_{RH} = 60(E_{TH}/\theta_{H2})$

Nomenclature

PM_{RH}	Paticulate emission rate for high fire test run, gr/hr
E_{TH}	Total particulate emissions for high fire test run including kindling and start-uo
θ_{H2}	Total test duration of high fire test run, from ignition of kindling to end of test run

Sample calculation

Data

E_{TH}	5	gr
θ_{H2}	96,00	min
PM_{RH}	3,07	kg/hr

Equation 9,2 (10) $PM_{FH} = E_{TH}/M_{TFBHdb}$

Nomenclature

PMF_H	Paticulate emission rate for high fire test run, gr/hr

Sample calculation

Data

E_{TH}	5	gr
M_{TFBHdb}	15,35	dry lb
PM_{RH}	0,71	gr/dry kg

for high fire test run
Equation 9,2 (11)

$$PM_{btuH} = E_{TH} / (M_{TFBHdb} * (HHV)\left(\frac{n_1}{100}\right)) * (10^6)$$

Nomenclature

PM_{btuH}	Particulate per heat output unit for high fire test run, lb/ MMbtu
HHV	Higher heating value of test fuel, dry basis, btu/lb
n_r	CSA B415,1 overall Efficiency, HHV (hot to hot)

Sample calculation

Data

E_{TH}	4,9	gr
M_{TFBHdb}	15,35	dry lb
HHV	8690	btu/lb
n_r	67,85%	
PM_{btuH}	0,1197	lb/Mmbtu

Equation 9,2 (12)

$$PM_R = 60(E_T/\theta)$$

Nomenclature

PM_R	Paticulate emission rate for low or medium fire test run, gr/hr
E_T	Total particulate emission for low or medium fire test run, from ASTME 2515 (g)
θ	Total duration of low or medium fire test run, min.

Sample calculation

Data

E_T	4	gr
θ	405	min
PM_{RH}	0,53	gr/hr

Equation 9,2 (13) $PM_F = E_T / M_{TFBdb}$

Nomenclature

PM_F Paticulate emission factor rate for low or medium fire test run, gr/dry kg

Sample calculation

Data

E_T	3,6	gr
M_{TFBdb}	15,25	dry lb
PM_F	0,52	gr/dry kg

for high fire test run
Equation 9,2 (14) $PM_{btu} = E_T / (M_{TFBdb}(HHV)(\frac{n_r}{100})) * (10^6)$

Nomenclature

Pmbtu Particulate per heat output unit for low and medium test run, lb/ MMbtu
HHV Higher heating value of test fuel, dry basis, btu/lb
n_r CSA B415,1 overall Efficiency, HHV (hot to hot)

Sample calculation

Data

E_{TH}	3,6	gr
M_{TFBHdb}	15,25	dry lb
HHV	8690	btu/lb
n_r	69,00%	
PM_{btuH}	0,0867	lb/Mmbtu

Volume of gas sample corrected to dry standard conditions ($V_{m(std)}$)

Equation used

ASTM 2515, equation 6

$$V_{m(std)} = K_1 V_m Y \left[\frac{P_{bar} + \left(\frac{\Delta H}{13.6}\right)}{T_m} \right]$$

Nomenclature

$V_{m\,(std)}$	Volume of gas sample , corrected to standard conditions, $dscm^3$ (dscf)
K_1	17.64 R/in Hg
V_m	Volume of gas sample
Y	DGM calibration factor
P_{bar}	Barometric pressure mmHg (in Hg)
ΔH	Average pressure at the outlet of the dry gas meter mm water (in. Water)
T_m	Absolute average dry gas meter temperature K (R)

Sample calculation

Data

V_m	75,99	dcf
Y	1,00136	
P_{bar}	29,85	in Hg
ΔH	-1,4256	in Hg
T_m	536,1	R

Calculation

$V_{m(std)}$	71,18	dscf

Calculation based of train 2 data Low fire

Total amount of particulate matter collected (m_n)

Equation used

ASTM 2515, equation 12

$$m_n = F_1 + F_2 + \Delta PF$$

Nomenclature

m_n	Total amount of particulate matter collected, mg
F_1	Particulate matter collected on front filter, mg
F_2	Particulate matter collected on second filter, mg
ΔPF	Post-test weight gain of probe and filter holder assembly, mg

Sample calculation

Data

F_1	0,0014	g
F_2	0,000	g
ΔPF	0,000	g

Calculation

m_n	1,800	mg

Calculation based of train 2 data Low fire

Particulate concentration (C_S)

Equation used

ASTM 2515, equation 13

$$C_S = (0{,}001\ g/mg) \times \left(\frac{m_n}{V_{m\,(std)}}\right)$$

Nomenclature

C_S	Concentration of particulate matter in stack gas or dilution tunnel, dry basis, corrected to standard conditions, g/dsm^3 (g/dscf)
m_n	Total amount of particulate matter collected in the sampling train, mg
$V_{m(std)}$	Volume of gas sample measured corrected to dry standard conditions, dsm^3 (dscf)

Sample calculation

Data

m_n	1,800	mg
$V_{m(std)}$	71,18	dscf

Calculation

C_s	0,000025	g/dscf

Calculation based of train 2 data Low fire

Particulate concentration for room air (C_r)

Equation used

ASTM 2515, equation 14

$$C_r = (0{,}001\ g/mg) \times \left(\frac{m_r}{V_{mr\,(std)}}\right)$$

Nomenclature

C_r	Concentration of particulate matter in room air, dry basis, corrected to standard conditions, g/dsm^3 (g/dscf)
m_r	Total amount of particulate matter collected in the sampling train, mg
$V_{mr(std)}$	Volume of room air sample measured corrected to dry standard conditions, dsm^3 (dsc

Sample calculation

Data

m_r	0,000	mg
$V_{mr(std)}$	70,74	dscf

Calculation

C_r	0,000000	g/dscf

Calculation based of train 2 data low

Adjustment factor for alternative pitot tube placement (FP)

Equation used

ASTM 2515, equation 1

$$F_P = \frac{V_{strav}}{V_{scent}}$$

Nomenclature

V_{strav}	Average gas velocity caclulated after the Pitot tube traverse
V_{scent}	Average gas velocity at the center of the dilution tunnel cacluated after the multi-point Pitot traverse
F_P	Adjustment factor for center of tunnel pitot tube placement

Sample calculation

Data

V_{strav}	0,250342767
V_{scent}	0,261723303

Calculation

F_P	0,956517

Average dilution tunnel gas velocity (V_S)

Equation used

ASTM 2515, equation 9

$$V_S = F_p K_P C_P \left(\sqrt{\Delta P}\right)_{avg} \sqrt{\frac{T_S}{P_S M_S}}$$

Nomenclature

V_S	Average dilution tunnel gas velocity, m/s (ft/s)
K_P	Pitot tube constant For the metric units: $34.97\ m/sec \left[\frac{\left(\frac{g}{g-mole}\right)(mm\ Hg)}{(°K)(mm\ H_2O)}\right]^{1/2}$ For English units: $85.49\ ft/sec \left[\frac{\left(\frac{lb}{lb-mole}\right)(in\ Hg)}{(°R)(in\ H_2O)}\right]^{1/2}$
C_P	Pitot tube coefficient (use 0.99 for standard pitot tube, 0.84 may be used for S-type tubes constructed according to Method 2 specifications)
F_P	Pitot tube correction factor
$\left(\sqrt{\Delta P}\right)_{avg}$	Average square root of each individual velocity head (ΔP)
P_{bar}	Barometric pressure at measurement site, mm H_2O (in. H_2O)
P_g	Stack static pressure, mm Hg (in. Hg)
P_S	Absolute dilution tunnel static gas pressure, mm Hg (in. Hg), or $P_{bar} + P_g$
M_S	Molecular weight of dilution tunnel gas, wet basis, g/g-mole (lb/lb-mol) may be assumed to be 28.78 or 29 for CSA B415
t_S	Dilution tunnel temperature, °C (°F)
T_S	Absolute dilution tunnel temperature, °K (°R), or 273 + t_s for metric units, 460 + t_s for English units

Sample calculation

Data

K_P	85,49	
C_P	0,99	
F_P	0,957	
$\left(\sqrt{\Delta P}\right)_{avg}$	0,2736	in $H_20^{1/2}$
P_{bar}	29,85	in Hg
P_g	0,27	in H_20
P_S	29,87	in Hg
M_S	29	lb/lb-mol
t_S	85,21	F
T_S	545,21	R

Calculation

V_S	17,5737	ft/s

Calculation based of data low

Average dilution tunnel gas flow rate (Qstd)

Equation used

ASTM 2515, equation 3

$$Q_{std} = 60(1 - B_{WS})V_S A \left(\frac{T_{std}}{T_S}\right)\left(\frac{P_S}{P_{std}}\right)$$

Nomenclature

Q_{std}	Total gas flow rate corrected to dry standard conditions, dsm^3/min (dscf/min)
60	Conversion factor minutes per hour
B_{WS}	Water vapour in the dilution tunnel stream, proportion by volume (may be assumed to be 2%)
V_S	Average dilution tunnel gas velocity, m/s (ft/s)
A	Cross-sectional area of dilution tunnel, m^2 (ft^2)
T_{std}	Standard absolute temperature, 293 °K (528°R)
T_S	Absolute average dilution tunnel temperature, °K (°R), or 273 + t_s for metric units, 460 + t_s for English units
t_S	Dilution tunnel temperature, °C (°F)
P_S	Absolute dilution tunnel static gas pressure, mm Hg (in. Hg), or P_{bar} + P_g
P_{bar}	Barometric pressure at measurement site, mm Hg (in. Hg)
P_g	Dilution tunnel static pressure, mm Hg (in. Hg)
P_{std}	Standard absolute pressure, 760 mm Hg (29.92 in. Hg)

Sample calculation

Data

B_{WS}	0,02	
V_S	17,574	
A	0,349	ft^2
T_{std}	528	R
T_S	545,21	R
P_S	29,875	in Hg
P_{std}	29,92	in Hg

Calculation

Q_{std}	348,79	dscf/min

Calculation based of data low

Particulate emission rate (E)

Equation used

$$E = (C_S - C_r)Q_{std}$$

Nomenclature

E	Particulate emission rate, g/hr
C_S	Concentration of particulate matter in stack gas or dilution tunnel gas, dry basis corrected to standard conditions, g/dscm^3 (g/dscf)
C_r	Concentration of particulate matter in room air, g/dscm^3 (g/dscf)
Q_{std}	Total gas flow rate, dry basis corrected to standard conditions, dsm^3/min (dscf/min)

Sample calculation

Data

C_S	0,000025	g/dscf
C_r	0,000000	g/dscf
Q_{std}	348,79	dscf/min

Calculation

E	0,01	g/min
E	0,53	g/h

Calculation based on train 2 data low

Total particulate emission rate (E_T)

Equation used

ASTM 2515, equation 15

$$E_T = (C_S - C_r)Q_{std}\theta$$

Nomenclature

E_T	Total particulate emission, g
C_S	Concentration of particulate matter in stack gas or dilution tunnel gas, dry basis corrected to standard conditions, g/dscm^3 (g/dscf)
C_r	Concentration of particulate matter in room air, g/dscm^3 (g/dscf)
Q_{std}	Total gas flow rate, dry basis corrected to standard conditions, dsm^3/min (dscf/min)
θ	Total sampling time, min

Sample calculation

Data

C_S	0,000025	g/dscf
C_r	0,000000	g/dscf
Q_{std}	348,79	dscf/min
θ	405	min

Calculation

E	3,57	g

Calculation based on train 2 data Low

Average gas velocity in dilution tunnel during each min interval, i, of the test run

Equation used

ASTM 2515, equation 10

$$v_{si} = F_p K_p C_p \sqrt{\Delta p_i} \sqrt{\frac{T_{si}}{P_s M_s}}$$

Nomenclature

v_{si}	Average gas velocity in dilution tunnel during each min interval, i of the test run m/sec (ft/sec)
F_P	Pitot tube correction factor
K_P	Pitot tube constant For the metric units: $34.97\ m/sec \left[\frac{\left(\frac{g}{g-mole}\right)(mm\ Hg)}{(^\circ K)(mm\ H_2O)}\right]^{1/2}$ For English units: $85.49\ ft/sec \left[\frac{\left(\frac{lb}{lb-mole}\right)(in\ Hg)}{(^\circ R)(in\ H_2O)}\right]^{1/2}$
C_P	Pitot tube coefficient (use 0.99 for standard pitot tube, 0.84 may be used for S-type tubes constructed according to Method 2 specifications)
Δp_i	interval, i, of the test run
T_{Si}	Absolute average gas temperature in the dilution tunnel during the ith minutes
P_S	Absolute dilution tunnel static gas pressure, mm Hg (in. Hg), or $P_{bar} + P_g$
M_S	Molecular weight of dilution tunnel gas, wet basis, g/g-mole (lb/lb-mol) may be assumed to be 28.78

Sample calculation

Data

i=1			**i=2**		
F_P	0,957		F_P	0,957	
K_P	85,49		K_P	85,49	
C_P	0,99		C_P	0,99	
Δp_i	0,067	in H_20	Δp_i	0,072	in H_20
T_{Si}	572,6	R	T_{Si}	572,7	R
P_S	29,87	in Hg	P_S	29,87	in Hg
M_S	29	lb/lb-mol	M_S	29	lb/lb-mol

Calculation

i=1			**i=2**		
v_{si}	17,06	ft/sec	v_{si}	17,70	ft/sec

Percent of proportional sampling rate (PR)

Equation used

B415, equation 13.1

$$PR = \left(\frac{\theta V_{mi(std)} V_S T_m T_{Si}}{\theta_i V_m V_{Si} T_{mi} T_S}\right) \times 100$$

Nomenclature

PR	Percent of proportional sampling rate (%)
θ	Total sampling time, min
θ_i	Time of interval, 1 min
V_m	Volume of gas sample measured by the DGM, dsm^3 (dscf)
$V_{mi(std)}$	Volume of gas sample measured by the digital mass flow controller during the ith 1 minutes interval, dsm^3 (dscf)
V_S	Average gas velocity in the dilution tunnel, ft/min
V_{Si}	Average gas velocity in the dilution tunnel during the ith 10 minutes interval, ft/min
T_m	Absolute average digital mass flow controller temperature, K (R)
T_{mi}	Absolute average digital mass flow controller temperature during the ith 1 minutes
T_S	Absolute average gas temperature in the dilution tunnel, K (R)
T_{Si}	Absolute average gas temperature in the dilution tunnel during the ith 1 minutes

Sample calculation

Data

train =1			train =2		
θ	405	min	θ	405	min
θ_i	1	min	θ_i	1	min
V_m	74,45	dcf	V_m	71,02	dcf
$V_{mi(std)}$	0,183	cuft	$V_{mi(std)}$	0,1778	cuft
V_S	17,58	ft/sec	V_S	17,58	ft/sec
V_{Si}	17,071	ft/sec	V_{Si}	17,071	ft/sec
T_m	532,3	R	T_m	536,1	R
T_{mi}	532,35	R	T_{mi}	534,92	R
T_S	545,21	R	T_S	545,21	R
T_{Si}	572,6	R	T_{Si}	572,6	R

Calculation

train=1			**train=2**		
PR	107,9	%	PR	109,9	%

Filter face velocity check

Equation used

$$FV_{max} = \frac{V_{mL}}{1} \times \frac{1}{F_A}$$

Nomenclature

FV_{max}	Maximum filter face velocity during the test run, m/min (ft/min)
V_{mL}	Largest 1 minute interval metered gas volume value recorded during the test run, dm^3 (dcf)
F_A	Filter area exposed to gas sample during train operation, m2 (ft^2)

Sample calculation

Data

V_{mL}	0,175	dcf
F_A	0,0116	ft^2

Calculation

FV_{max}	15,13	ft/min

Dual train precision

Equation used

$$\frac{Train\ 1 - average\ train\ 1\ and\ train\ 2}{average\ train\ 1\ and\ train\ 2} \times 100 \leq 7.5\%$$

Nomenclature

Dual train precision	Deviation between emission's train 1 and 2
Train 1	Total emission for train 1
Train 2	Total emission for train 2

Sample calculation

Data

Train 1	3,61 g
Train 2	3,58 g

Calculation

Dual train precision	0,34 %

Analyzer drift checks

Equation used

$$Drift = \frac{\Delta R}{span} \times 100$$

Nomenclature

Drift	The change in analyzer response to calibration gas over the duration of the test run
ΔR	The difference between the analyzer response at the end of the test run and the
Span	The upper limit of the instrument range, ppmv or %

Sample calculation

Data

ΔR	0,015	%
Span	5	%

Calculation

Drift	0,30	%

Calculated with CO concentration values.

APPENDIX 12: Volume calculations

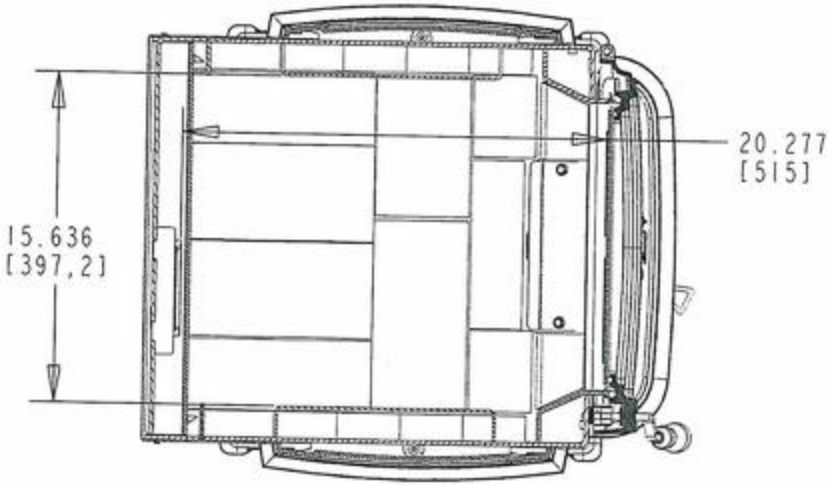

SECTION B-B

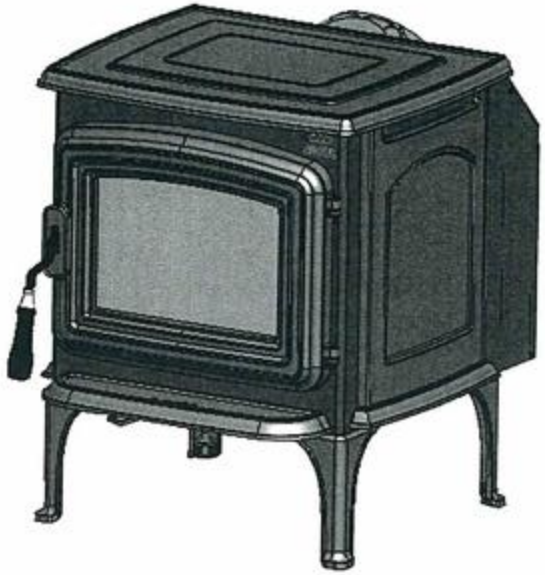

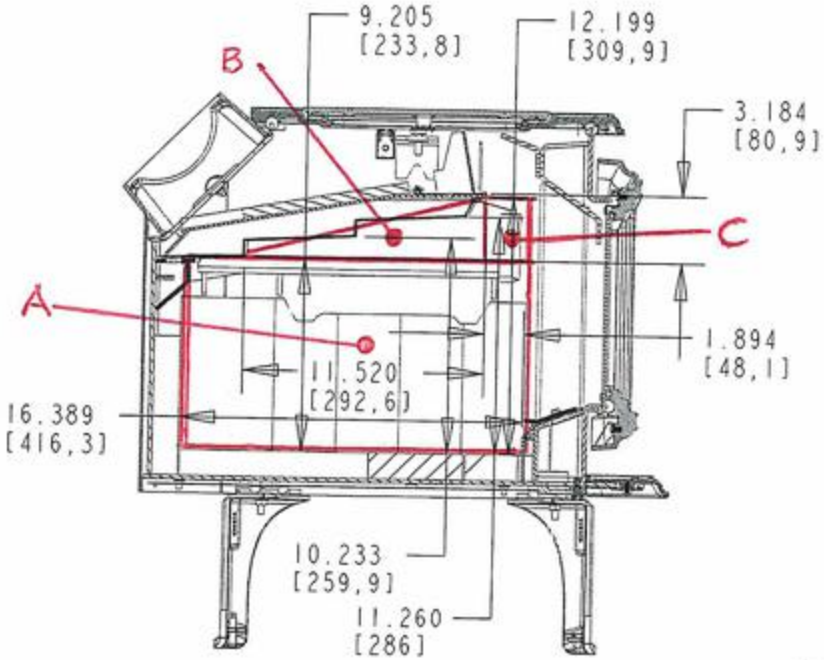

SECTION A-A

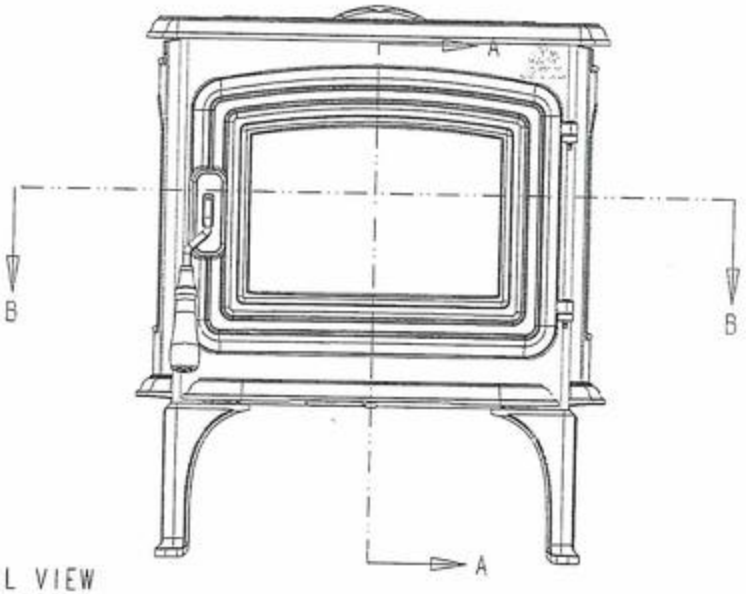

FIREBOX DETAIL VIEW
JØTUL F 35
DWG. 351695D

JØTUL

Jøtul F 35 Firebox Volume Calculation

For purposes of simplicity of calculation, the firebox was divided into three distinct volumes, A, B and C.

Drawing 351695j has been adjusted to illustrate the three distinct volumes.

The following is calculations for each of the three volumes.

Volume A

16.389 (L) x 9.205 (H) x 15.636 (D) = 2358.859 cu. in.

Volume B

12.199 (H) – 9.205 (H) = 2.992 (Avg H)

(2.994 Avg (H) x 11.250 (L)) / 2 = 17.245

17.245 x 15.636 (W) = 269.643 cu. in.

Volume C

1.894 (L) x 3.184 (H) x 15.636 (W) = 94.293

2358.859 (VA) + 269.643 (VB) + 94.293 (VC) = 2722.795 cu. in. firebox volume

2722.795 / 1728 = 1.576 cu. ft. firebox volume

APPENDIX 13: Operating instruction

High Fire with a Cold Start

To start the fire from a "cold" stove:

1. Cut and split approximately 15 kindling pieces 16 inches long. Half of them should be approximately ¾ inch square, the rest ½ inch square. The kindling should be very dry and weigh approximately 3 lbs.
2. Cut and split approximately 15 start-up fuel pieces 16 inches long. Half of the pieces should be larger cross-section (approximately 1 ½ inches square) and the rest smaller cross-section (approximately 1 inches square). These can be split from larger fuel pieces that are in the range of 19-25% moisture (Dry-basis). The total weight of the start-up fuel should be approximately 4.5 lbs.
3. Arrange the start-up fuel pieces in a grid as shown in the pictures. Place two of the larger pieces about six inches apart going front to back. Next, two more pieces the same size left to right about six inches apart. Place about seven of the small pieces front to back on top of the gird. Place the remaining start up fuel sideways on top.
4. Next arrange the kindling pieces in a similar alternation grid pattern with the larger pieces first followed by the smallest with a layer of three pieces going left to right as shown with six or seven pieces on the top. **See Photos**

Start up fuel

Start up fuel and kindling on top, start up fuel on the bottom, stacked in the fire box from largest cross-section on the bottom to smallest on the top.

5. To start, make sure the air control is pushed all the way to the right.
6. Using a propane torch, light the top front of the kindling grid. The torch should be operated for 60 seconds.
7. Close the door until it hits the latch. This will leave the door in a slightly open position.
8. After one minute, close the door fully and secure the door latch.
9. Make sure the air control is still in the maximum open position.

Adding the High Fire fuel load:

1. When the kindling and start up fuel have burned down by approximately 2/3, rake the remaining coals and fuel pieces forward until they are equally distributed and level.
2. Place the largest fuel piece in the center of the firebox with two smaller pieces on the either side packed tightly together and making sure there is space on both sides of the load for good air flow. Place the remaining pieces on top of the bottom pieces. All fuel pieces should be in a front-to-back orientation. Air control should be set to maximum open all the way to the right.

Low Fire Fueling and Operation (loading on coals after High Fire operation):

1. At the end of the high fire rake the remaining coals forward until they are equally distributed and level across the firebox.
2. Place the three largest pieces in first, they should be close together. Place the remaining pieces on top of the first in the same way.
3. Immediately close the door and open the air control to maximum open (all the way out).
4. Leave the air control on the max setting for 10 minutes, then medium for 5 minutes. Then push the air control all the way to the left.

Medium Fire Fueling and Operation (loading on coals after High Fire operation):

1. At the end of the high fire rake the remaining coals forward until they are equally distributed and level across the firebox.
2. Place the largest piece in the center of the firebox with two smaller pieces on either side, packed tightly together making sure there is space on both sides of the load for good air flow, place the remaining pieces on top. All fuel pieces should be in a front-to-back orientation.
3. Immediately close the load door and set the air control to maximum open (all the way to the right).
4. After 5 minutes set the control to the medium air flow position which is the center of its range of travel.

APPENDIX 14: Drawing Air flow pattern

FLOW DIAGRAM

EXHAUST

PRIMARY

SECONDARY

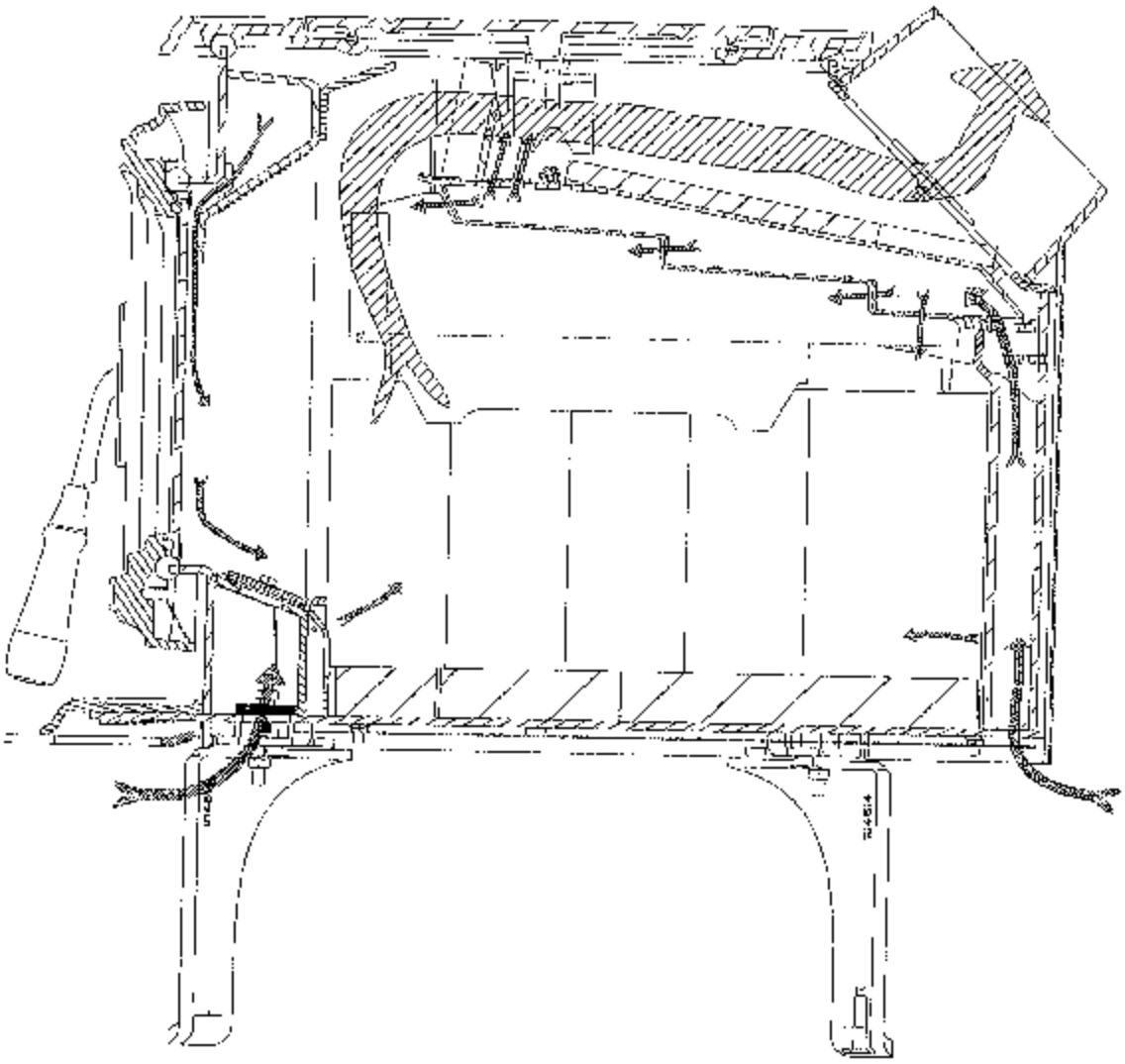

SECTION FLOW-FLOW

AIR FLOW VIEW
JØTUL F 35
DWG. 35.695E

JØTUL

APPENDIX 15: Application for wood stove program

intertek
Total Quality. Assured.

CERTIFICATE OF CONFORMITY

Emissions – Wood Heater

EPA 40 CFR Part, Subpart AAA, EPA Method ALT-125, ASTM E2515-2011, ASTM E3053-2017, CSA B415.1-10

WHI21 – 20548604

Organization

Jotul North America, Inc.
55 Hutcherson Drive
Gorham, ME 04038
USA

Product: F35

Catalytic: No
Maximum Output: 59,443 Btu/hr
Weighted Average Emissions: 1.16 g/hr
Weighted Average Annual Delivered Efficiency (HHV): 68.5%
Test Fuel Type: Cordwood
Weighted Average CO Emissions Rate (g/min): 1.35
Conformance: Complies with 2020 particulate emissions standard
Test Report No.: PI-20250

Certification Body: Intertek Testing Services NA, Inc.
Registered Address: 545 E. Algonquin Rd., Arlington Heights, IL 60005, USA
Initial Issue Date: 21-Apr-21
Date of Expiry: 22-Dec-26
Issue Status: 2

This is a certificate of conformity to confirm that the bearer has successfully completed the requirements of the Intertek certification scheme which include the testing of products and the initial assessment. The bearer is subject to continuing assessments of their compliance through surveillance and testing of products samples taken from production (as applicable to the scheme) and has been registered within the scheme for the products detailed. The validity of this certificate is contingent to the listing's status on the Intertek Directory of Building Products: bpdirectory.intertek.com.

Jean-Philippe Kayl Vice President – Global Certification		22-Dec-21
Name	Signature	Date

Version: 11 November 2021 SFT-BCH-OP-19c

intertek
Total Quality. Assured.

Certificate of Conformity WHI21-20548604
Appendix A

Certificate of Conformity #:		Certificate of Conformity Original Issue Date:	
WHI21 – 20548604		**April 21, 2021**	
REVISION #	**REVISION DATE**	**REPORT PAGES**	**REVISION**
0	April 21, 2021	N/A	Original Report Issue
1	December 16, 2021	N/A	Reissue based on test report corrections. New format.

Report #:		Report Original Issue Date:	
PI-20250		**March 16, 2021**	
REVISION #	**REVISION DATE**	**REPORT PAGES**	**REVISION**
0	March 16, 2021	N/A	Original Report Issue
1	December 13, 2021	7	Table 2.3 corrected with ambient temperature and corrected preburn duration
		64	Appendix 1 updated for to include SU/H preburn for Run 2.1
		10	Table 2.9 updated to include dual train precision in g/kg
		87	Appendix 3 updated with calibration table
		242	Appendix 8 updated depiction of dilution tunnel with mixing baffles removed
		244-247	Appendix 9 updated photos of tests
		204-231	Appendix 7 corrected instruction manual added to specify 16” fuel length.

intertek
Total Quality. Assured.

Certificate of Conformity

Emissions – Adjustable burn rate wood burning heater

EPA 40 CFR Part, Subpart AAA, EPA Method ALT-125, ASTM E2515-2011, ASTM E3053-2017

Certificate number: WHI21 – 20548604

Organization:
Company Name: Jotul North America, Inc.
Address: 55 Hutcherson Drive
City, State: Gorham, ME
Zip Code: 04038
Country: USA

This is a certificate of conformity to certify that the bearer has successfully completed the requirements of the above scheme which include the testing of products, the initial assessment, and are subject to continuing annual assessments of their compliance and testing of samples of products taken from production (as applicable to the scheme) and has been registered within the scheme for the products detailed.

Product: Model F35
Maximum Output: 59,443 Btu/hour
Weighted Average Emissions Rate: 1.57 g/hr
Weighted Average Efficiency: 68.47%
Test Fuel Type: Cordwood
Compliance: Certified to comply with 2020 particulate emissions standard.
Report Number: PI-20250

Certification body: Intertek Testing Services NA, Inc.
Initial registration: April 21, 2021
Date of expiry: April 21, 2026
Issue status: 1

Charles Meyers Director, Product Certification		4/22/2021
Name	Signature	Date

www.intertek.com

Registered address:
Intertek Testing Services NA, Inc. 545 E. Algonquin Rd. Arlington Heights, IL 60005 USA

UNITED STATES ENVIRONMENTAL PROTECTION AGENCY
RESEARCH TRIANGLE PARK, NC 27711

FEB 28 2018

OFFICE OF
AIR QUALITY PLANNING
AND STANDARDS

Mr. Justin White
Hearthstone QHPP, Inc.
#17 Stafford Ave.
Morrisville, VT 05661

Dear Mr. White,

I am writing in response to your letter dated January 12, 2018, regarding wood heaters manufactured by Hearthstone QHPP, Inc. (Hearthstone). This response, dated February 28, 2018, supercedes our previous response (dated February 26, 2018) to correct an inaccuracy regarding required changes to ASTM E3053-17.

You are requesting to use an alternative test method, using cord wood, as referenced in section 60.532(c) of 40 CFR part 60, Subpart AAA, Standards of Performance for New Residential Wood Heaters (Subpart AAA) to meet the 2020 cord wood alternative compliance option. The 2020 cord wood alternative compliance option states that each affected wood heater manufactured or sold at retail for use in the United States on or after May 15, 2020, must not discharge into the atmosphere any gases that contain particulate matter in excess of 2.5 g/hr. Compliance must be determined by a cord wood test method approved by the Administrator along with the procedures in 40 CFR 60.534. You have requested approval to use the procedures and specifications found in ASTM Method E3053-17, a cord wood test method titled, "Standard Test Method for Determining Particulate Matter Emissions from Wood Heaters using Cordwood Test Fuel," in conjunction with ASTM E2515-11 and Canadian Standards Administration (CSA) Method CSA-B415.1-10, which are specified in 40 CFR 60.534.

We understand that Hearthstone is also requesting that the alternative method proposed above be approved to apply broadly to all wood heaters manufactured by Hearthstone meeting the requirements of Subpart AAA, from the approval date of this request until such time that Subpart AAA is revised or replaced to require a different cord wood certification method, providing all requirements of section 60.533 of Subpart AAA are met.

With the caveats set forth below, we approve your alternative test method request for certifying wood heaters using ASTM E3053-17 in conjunction with section 60.534 of Subpart AAA to meet the 2020 cord wood compliance option until such time that Subpart AAA is revised or replaced to require a different cord wood certification method. We also approve application of this alternative method to all wood heaters manufactured by Hearthstone meeting the requirements of Subpart AAA.

As required in Subpart AAA, section 60.354(d), you or your approved test laboratory must also measure the first hour of particulate matter emissions for each test run using a separate filter in one of the two parallel sampling trains. These results must be reported separately and also included in the total particulate matter emissions per run. Also, as required by Subpart AAA, section 60.534(e), you must have your approved laboratory measure the efficiency, heat output, and carbon monoxide emissions of the tested wood heater using CSA-B415.1-10. For measurement of particulate matter emission concentrations, ASTM 2515-11 must be used.

The following change to ASTM E3053-17 must be followed:

1. Coal bed conditions prior to loading test fuel. The coal bed shall be a level plane without valleys or ridges for all test runs in the high, low, and medium burn rate categories.

The following changes to ASTM E2515-11 must be followed:

1. The filter temperature must be maintained between 80 and 90 degrees F during testing.

2. Filters must be weighed in pairs to reduce weighing error propagation; see ASTM 2515-11, Section 10.2.1 Analytical Procedure.

3. Sample filters must be Pall TX-40 or equivalent Teflon-coated glass fiber, and of 47 mm, 90 mm, 100 mm, or 110 mm in diameter.

4. Only one point is allowed outside the +/- 10 percent proportionality range per test run.

A copy of this letter must be included in each certification test report where this alternative test method is utilized.

It is reasonable that this alternative test method approval be broadly applicable to all wood heaters subject to the requirements of 40 CFR part 60, Subpart AAA. For this reason, we will post this letter as ALT-125 on our website at *http://www3.epa.gov/ttn/emc/approalt.html* for use by other interested parties. As noted earlier in this letter, this alternative method approval is valid until such time that Subpart AAA is revised or replaced to require a different cord wood certification method, and at such time, this alternative will be reconsidered and possibly withdrawn.

If you have additional questions regarding this approval, please contact Michael Toney of my staff at 919-541-5247 or toney.mike@epa.gov.

Sincerely,

Steffan M. Johnson, Group Leader
Measurement Technology Group

cc: Amanda Aldridge, EPA/OAQPS/OID
Adam Baumgart-Getz, EPA/OAQPS/OID
Rafael Sanchez, EPA/OECA
Michael Toney, EPA/OAQPS/AQAD

U.S. ENVIRONMENTAL PROTECTION AGENCY (EPA)
30-DAY NOTIFICATION FORM
PURSUANT TO 40 CFR PART 60 SUBPARTS AAA AND QQQQ
2015 STANDARDS OF PERFORMANCE FOR NEW RESIDENTIAL WOOD HEATERS, NEW RESIDENTIAL HYDRONIC HEATERS AND FORCED-AIR FURNACES

Disclaimer: The statutory provisions and the EPA regulations described in this document contain legally binding requirements. This document is not a substitute for those provisions or regulations, nor is it a regulation itself. In the event of a discrepancy, please refer to 40 CFR PART 60 Subparts AAA AND QQQQ, Sections 60.533 and 60.5475. This document may be revised periodically without public notice. If you have additional questions, please contact Rafael Sanchez at 202-564-7028 or via email at sanchez.rafael@epa.gov.

- **The manufacturer of an affected wood/pellet heater/central heater model line must notify the Administrator of the date that certification testing is scheduled to begin by email to WoodHeaterReports@epa.gov.**
- **This notice must be received by the EPA at least 30 days before the start of testing.**

GENERAL INFORMATION

Manufacturer's Name: Jøtul North America

Appliance Type (Circle One):	Adjustable Burn Rate Wood Heater	Pellet Stove	Single Burn Rate Heater	Hydronic Heater	Forced Air Furnace	Other:
Hydronic Heater Type (Circle One):	Traditional	Full Storage	Partial Storage	Indoor/Outdoor	Other:	
Forced-Air Furnace Type (Circle One):	Small (less than 65,000 BTU/hr heat output)		Large (greater than 65,000 BTU/hr heat output)		Other:	
Fuel Type:	Crib	Pellet	Cordwood	Other:		

Model Name and Number: F 35

Catalyst: Yes_____ **No**__X___

Mailing Address: Jøtul North America

Street Address: 55 Hutcherson Drive

City: Gorham	**State:** Maine	**ZIP Code:** 04038
Phone: 207-591-6601	**Fax:** 207-591-6606	**Web Site:** Jotul.com/us/home

Address of Manufacturing Facility: Same address as above

City:	**State**	**ZIP Code:**

U.S. ENVIRONMENTAL PROTECTION AGENCY (EPA)
30-DAY NOTIFICATION FORM
PURSUANT TO 40 CFR PART 60 SUBPARTS AAA AND QQQQ
2015 STANDARDS OF PERFORMANCE FOR NEW RESIDENTIAL WOOD HEATERS, NEW RESIDENTIAL HYDRONIC HEATERS AND FORCED-AIR FURNACES

Disclaimer: The statutory provisions and the EPA regulations described in this document contain legally binding requirements. This document is not a substitute for those provisions or regulations, nor is it a regulation itself. In the event of a discrepancy, please refer to 40 CFR PART 60 Subparts AAA AND QQQQ, Sections 60.533 and 60.5475. This document may be revised periodically without public notice. If you have additional questions, please contact Rafael Sanchez at 202-564-7028 or via email at sanchez.rafael@epa.gov.

- **The manufacturer of an affected wood/pellet heater/central heater model line must notify the Administrator of the date that certification testing is scheduled to begin by email to WoodHeaterReports@epa.gov.**
- **This notice must be received by the EPA at least 30 days before the start of testing.**

EPA APPROVED TEST LABORATORY		
Name and Title of Authorized Representative: Danick Power, Vice President Operations		
Company: Polytests Services Inc.		
Phone: 450-741-3636	**E-mail:** dpower@polytests.com	**Fax:**
City: St-Jean-sur-Richelieu	**Province & Country:** Quebec, Canada	**ZIP Code:** J3B 727

EPA APPROVED THIRD-PARTY CERTIFIER		
Name and Title of Authorized Representative: **Charles Meyers – Certification Manager**		
Company: Intertek		
Phone: 312-906-7783	**E-mail:** charles.meyers@intertek.com	**Fax:**
City: Arlington Heights	**State:** IL	**ZIP Code:** 60005

COMPLIANCE TEST INFORMATION
Test Method(s): ALT-125, ASTM E2515-11, ASTM E3053-17, CSA B415.1-10
Date(s) of Proposed Test: February 22 – February 26, 2021

U.S. ENVIRONMENTAL PROTECTION AGENCY (EPA)
30-DAY NOTIFICATION FORM
PURSUANT TO 40 CFR PART 60 SUBPARTS AAA AND QQQQ
2015 STANDARDS OF PERFORMANCE FOR NEW RESIDENTIAL WOOD HEATERS, NEW RESIDENTIAL HYDRONIC HEATERS AND FORCED-AIR FURNACES

Disclaimer: The statutory provisions and the EPA regulations described in this document contain legally binding requirements. This document is not a substitute for those provisions or regulations, nor is it a regulation itself. In the event of a discrepancy, please refer to 40 CFR PART 60 Subparts AAA AND QQQQ, Sections 60.533 and 60.5475. This document may be revised periodically without public notice. If you have additional questions, please contact Rafael Sanchez at 202-564-7028 or via email at sanchez.rafael@epa.gov.

- **The manufacturer of an affected wood/pellet heater/central heater model line must notify the Administrator of the date that certification testing is scheduled to begin by email to WoodHeaterReports@epa.gov.**
- **This notice must be received by the EPA at least 30 days before the start of testing.**

Testing Location:
Polytests Services Inc.
695 B rue Gaudette
St-Jean-sur-Richelieu
Quebec, Canada J3B 727

RogerW. Purinton, Research & Development Manager

Print Name and Title of Authorized Official

Roger W Purinton

Signature

JANUARY 4, 2021

Date

Remarks:

v1

St-jean-sur-Richelieu, September 8th 2021

Att.: Rafael Sanchez, Steffan Johnson

Subject: TYPO, mixing baffle in template report

In our report template we forgot to remove the reference of the mixing baffle in the dilution tunnel in the description section 3.1 and in the drawing in appendix 8 for our report template. This TYPO will can be found in most of our EPA reports. In reality the mixing baffles has been removed from the tunnel in 2015 when the E.P.A. review the regulation and refer to the ASMTE2515 for sampling standard. Our Iso 17025 accreditor (IAS) has audited Polytests for the ASMT E2515 and other testing method in March 2015 and found the dilution tunnel compliant to the standard (no mixing baffle in place). Moreover, we have been audited every two years by the EPA proficiency testing and dilution tunnel have been dismantling and inspected by the auditor and no mixing baffle was in the dilution tunnels. In order to fix this issue, reports are updated to remove the TYPO and updated the drawing of the dilution tunnel in appendix 8.

Thank you
Best regards,

Danick Power
Polytests services inc.
695-B Gaudette
St-jean-sur-richelieu
J3B 7S7
Phone. : 450 741-3636
e-mail: infos@polytests.com

Regards,

Greg Dupuis
Operations Manager, Certification
Building & Construction
Direct 608-824-7459
Mobile 608-772-6434
Intertek, 545 E Algonquin Rd., Arlington Heights, IL 60005
Intertek, 8431 Murphy Drive, Middleton, WI 53562
intertek.com
intertek
Total Quality. Assured.

International Accreditation Service, Inc.
3060 Saturn Street, Suite 100
Brea, CA 92821-1732 USA
tel: 562.364.8201
tel: 866.427.4422
fax: 562.699.8031
www.iasonline.org

IAS Laboratory Assessment Report

File or TL No.: File 2014-12-10

Laboratory Name: Services Polytests, Inc.

Laboratory Address: 695B Gaudette, St. Jean-sur-Richelieu, Quebec, J3B 7S7, Canada

Name and Title of Laboratory Contact: Gaetan Piedalue, P. Eng.; President

Name of Assessor: Douglas Sickles, P.E.

Date(s) of Assessment: March 16-20, 2015

Use this space to record names and titles of persons present at opening meeting:

Services Polytests : Gaetan Piedalue, P. Eng.; President ; Danick Power, VP, Operation Manager; Marie-Josee Brudeau, Quality Manager

IAS: Douglas Sickles, P.E.

Use this space to record names and titles of persons present at closing meeting:

Services Polytests : Gaetan Piedalue, P. Eng.; President ; Danick Power, VP, Operations Manager

IAS: Douglas Sickles, P.E.

Signature of Laboratory Representative:

Signature of Assessor:

Reviewer Comments: Reviewed by: Date:

Report	Date	Client	Product	Standards	Tested By:	Reviewer
P-1164	12-2012	ICC	Chimney Liner	ULC S640, UL 1777	Alain Lefebvre	Danick Power
P-1223	10-2014	ICC	Flexible Liner	ULC S640, UL 1777	Alain Lefebvre	Danick Power
P-1231	12-2014	ESIM	Automatically fed pellet/wood chip fired boiler	CSA B366.1 CSA B415.1 UL 2523 EPA Method 28 WHH ASTM 2515A	Maxime Martin	Danick Power
P-1246	11-2014	JA Roby	Wood Stove	UL 1482, ULC S627		Danick Power

TEST METHODS DEMONSTRATED AND REVIEWED:

Test methods demonstrated: (many tests shared between standards)

Test Standard/Method	Title
ANSI/UL 1482	Solid Fuel Type Room Heaters
CAN/ULC S627	Standard for Space Heaters for use with Solid Fuels
ASTM E1509	Standard Specification for Room Heaters, Pellet Fuel Burning type
CAN/CSA B366.1	Solid Fuel Fired Heating Appliances
CAN/CSA B415	Performance Testing of Solid Fuel Burning Heating Appliances
ASTM E2515	Determination of particulate matter collected by a dilution tunnel

Test methods that involved interviews and equipment review:

Test Standard/Method	Title
ULC S628	Fireplace Inserts
ANSI/UL 2523	Solid Fuel Fired Hydronic Heating Appliances, Water Heaters and Boilers
CAN/ULC S610	Standard for Factory Built Fireplaces
ANSI/UL 127	Factory Built Fireplaces
ANSI/UL 391	Solid Fuel and Combination Fuel Central and Supplementary Furnaces”
CAN/ULC S632	Standard for Heat Shields
ANSI/UL 1618	Wall protectors, floor protectors and hearth extensions
EPA 40 CFR Part 60, Subpart AAA, Method 28R	Certification and Auditing of Wood Heaters
EPA 40 CFR Part 60, Subpart QQQ, Method 28WHH	Measurement of Particulate Emissions and Heating Efficiency of Wood-Fired Hydronic Heating Appliances
E2558,E2618, E2779, E2780	Particulate Matter Emissions for Wood, heaters, Pellet heaters, Boilers, Wood Fireplaces
ULC S604	Standard for Factory-Built type A Chimneys
ULC S629	Standard for 650°C Factory-Built Chimneys
UL 103	Factory-Built Chimneys for Residential type and Building Heating Appliances
ULC S640	Standard for Lining Systems for New Masonry Chimneys
ULC S641	Standard for Factory-Built Chimney connectors and wall pass-through assemblies
UL 1777	Chimney Liners
ULC S635	Standard for Lining Systems for Existing Masonry or Factory-Built Chimneys and Vents

Intertek Testing Services NA, Inc.
8431 Murphy Drive
Middleton, WI 53562

Tel +1-608-836-4400

www.intertek.com

Issue Date: September 9, 2021

Subject: Dilution tunnel depiction in test reports

Memo to file –

U.S. EPA has indicated that the depiction of the dilution tunnel (Figure 1) noted in all emissions test reports is showing an incorrect drawing. The current drawing is showing mixing baffles in the top portion of the tunnel, which was a requirement of EPA Method 5G.

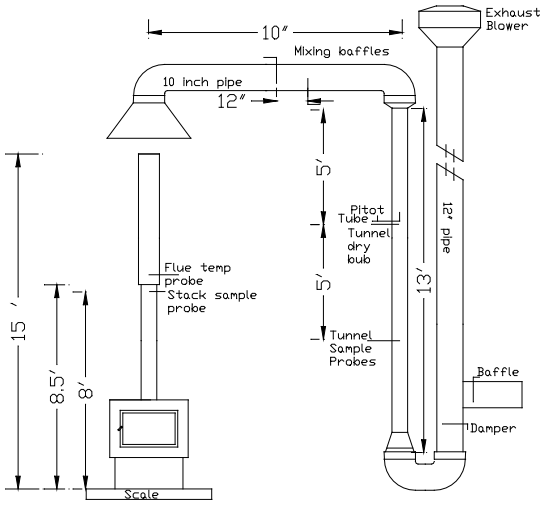

FIGURE 1

Depiction of the original dilution tunnel with the mixing baffles.

ASTM E2515 replaced EPA Method 5G and part of the requirement was to remove the mixing baffles. Figure 1 was revised to remove the baffles. Two separate drawings were created, one to show a 6" diameter pipe for the sampling area and the second to show a tunnel with a 12" sampling area. Both tunnels are connected together and use one exhaust blower. The mixing baffles have not been removed from the tunnel and are now used as blast gates to close off the tunnel not being used for the test.

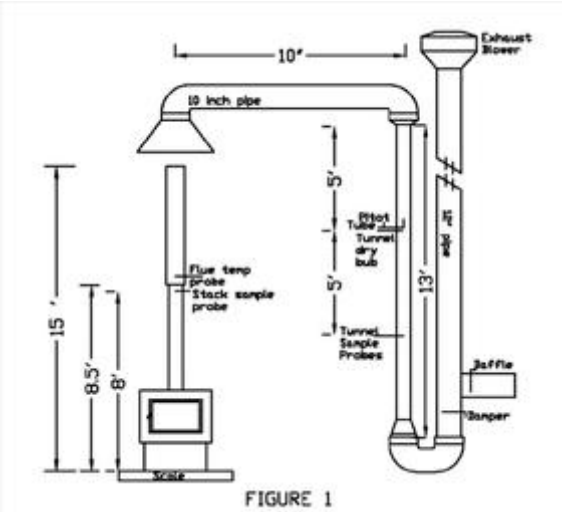

Depiction of 6” dilution tunnel without baffles

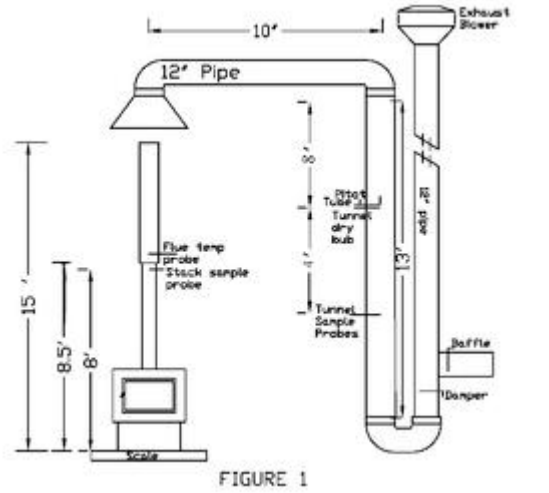

Depiction of 12” dilution tunnel without baffles.

When either tunnel is used, the blast gates are retracted to the full open position during the testing.

INTERTEK TESTING SERVICES NA, INC.

Reported by:

Brian Ziegler
Technical Team Leader - Hearth

Reviewed By:

Greg Dupuis
Manager US Evaluation Services

List of Issues Found			How addressed by the Test Lab/MFG?
Issue	**Applicable Method/Rule Section**	**Notes**	
1. Table 2.3 (page 6 non-CBI) lists test 2.1 "min observe ambient temp" as 0.00. This is likely an error.		In the revised test report, clarify and/or update.	Table 2.3 TYPO, corrected for ambient minimum temperature
2. Missing information: Please provide SU/H data (CEM, scale, temperature, etc.) for the 2.1 test day.	**40 CFR 60.533(b)(5)**	In the revised test report, provide requested data (we recognize the fuel data is already included).	Appendix 1 updated to include SU/H preburn for run 2.1
3. Missing information: Could not find both dual train comparisons (precision) % and g/kg in the test report. Found % but not g/kg.	**ASTM E2515 (11.7)**	Dual train comparison (precision) must be calculated, and both comparisons (% and g/kg) must be included in the report. The criteria for acceptance is either/or, but both must be presented in the report. In the revised test report, include g/kg data.	Table 2.9 updated to include dual train precision in g/Kg
4. Request of additional information: Calibration sheets and dates of calibrations (starts on page 86/264).	**40 CFR 60.533(b)(5)** **ASTM E2515 (8.1), (8.2), (8.3), (8.4)**	Polytests had offered a summary table with the calibration dates when the equipment was calibrated & when it is due. In the revised test report, submit the above-referenced summary table.	Appendix 3 calibration for table of calibration dates
5. Request for clarification: Page 7/264 (non-CBI) shows that high burn test for 1.1 ran 96 minutes. Test 2.1		In the revised test report, explain why the first high fire was so much shorter than the second.	Table 2.3 typo corrected for preburn duration

	high burn shows 249 minutes. (See photo below)			
6.	Page 199/264 (non-CBI) shows the description at the top "Picture 2: Hood and mixing baffles"		In the revised test report, update the template to remove outdated diagrams and provide the applicable documentation.	Appendix 8 updated to remove mixing baffle and additional letter signed from the certifier
7.	Testing photos page 209/264 (non-CBI).		In the revised test report, include photos of the fuel loaded into the stove with the door open.	No photos available with door open, picture have been taken through the glass door, all piece staked together front to back on a leveled coal bed. Testing was done prior to all revision by ADEC, further testing will have more details pictures.
8.	Page 245/264 (non-CBI) shows that the longest dimension is 16.389" yet the owner's manual (page 170/246 non-CBI) states that fuel can be up to 18" in length. When evaluating the firebox diagram, we ask why the space behind the door was not considered in calculating the usable firebox volume? (See photo below)		According to our review of the usable firebox volume, we have determined space that could be usable volume within the firebox that was not accounted for. Our determination was based on a maximum fuel length of 18", which implies that you can fit more fuel into the stove. In the revised test report, include this usable space in your usable volume calculations, recalculate the volume, and check the test run loading density for compliance with method requirements.	Jotul North America provides an explanation as to why the volume in question should not be considered useable firebox volume.

December 14, 2021

Mr. Rafael Sanchez, Ph.D.
United States Environmental Protection Agency
Air Branch
Monitoring, Assistance, and Media Programs Division
Office of Compliance
Room 7149-D
1200 Pennsylvania Avenue NW
Mail Code: 2227A
Washington D.C. 20004

Subject: **Jøtul F 35 Certification Test report Review**

Dear Mr. Sanchez,

The purpose of this correspondence is to address the “irregularity” cited regarding firebox volume calculations and fuel piece length cited in the F 35 certification report review.

We appreciate and understand the question and believe there is a reasonable and comprehensive explanation for specifying 16” fuel as the only suitable length.

First it should be noted that the 18” reference contained in the manual submitted with the report was in error It should have been 16” and was a carryover from a previous product manual used as a template for the F 35 manual.

There are several negative outcomes of trying to use 18” fuel pieces relative to the fierbox geometry. Foremost, several aspects exist that make the use of 18” fuel length pieces either impractical and or damaging to the product and or could potentially present a hazard the consumer. Additionally, fuel piece lengths significantly over 16” could be an impediment to allow for reliable and consistent low emissions performance.

To further explain, attached is a drawing providing an additional dimension to assist in the explanation. Please take note of the dimension 17. 50”. That dimension represents the distance from the first “step” in the secondary baffle at the top rear of the firebox to the door glass.

As is clearly demonstrated, the rear end of an 18” fuel piece positioned at the top of the load and up against the first baffle step would extend the front of the fuel piece beyond the door opening and prevent closing of the door and require removing of a perhaps already ignited fuel piece. Additionally, a fuel piece a bit short of 18” could cause the door glass to impact the end of the fuel piece when the door is closed and consequently break the glass. Both of these situations have the potential to present a hazard to the consumer and potential liability for Jotul North America

Lengths over 16” could negatively impact firebox flow dynamics. When a 16” fuel piece is up against the first baffle step it will still allow adequate air flow downward from the air wash manifold into the fuel load and not pose a hazard condition. Fuel pieces over 16” can partially to completely impede proper air flow.

Should the consumer attempt to use 18” length fuel they would quickly encounter the issues provided above and for that reason would certainly revert to 16” fuel to alleviate the situation. Also, it would be very unlikely for a consumer to have more than one size length of fuel and have both 16” and 18”

Common firewood lengths are either 16” or 18” and not somewhere in between.

Language in the manual can be expanded to further elaborate on the need to use only 16” wood for the reasons provided above. See additional highlighted language in manual submitted with revised report for review.

Regarding recalculating the fuel loads for a larger firebox for 18” length pieces, with all the above taken into account, it would be reasonable to consider that exercise as a moot point as it would not be practical and applicable to real world use.

While test standards always attempt to capture all possible aspects of design, the reality is that there will be situations and conditions that do not fit neatly into those parameters and have to be taken into consideration based on their own merit. It is Jøtul’s belief that this is an example of such a situation.

In closing, it has always been Jøtul’s intent to design products that will replicate emissions performance in the field as achieved in the laboratory as well as being safe for the consumer.

We hope that this explanation will provide an acceptable reason to confirm the original firebox volume calculations and 16” fuel length as being applicable.

Respectfully submitted,

Roger W. Purinton
Research Development Manager
Jotul North America
55 Hutcherson Drive, Gorham Maine
Gorham, Maine 04038

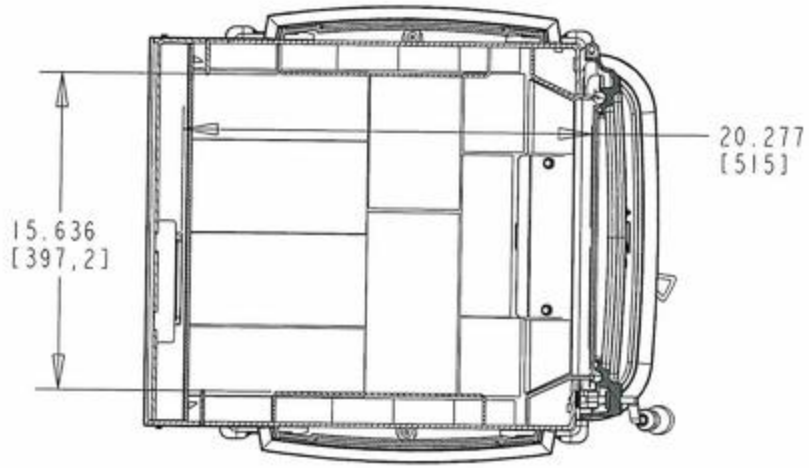

SECTION B-B

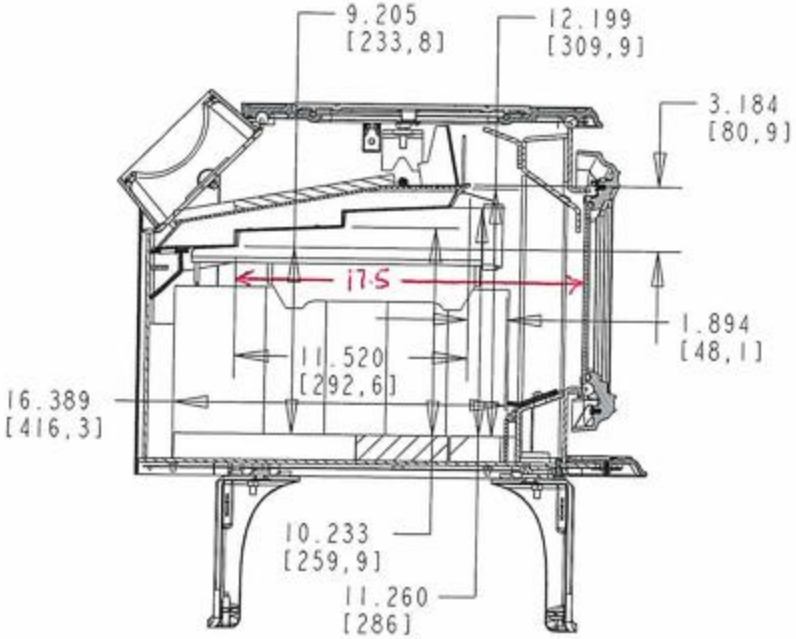

SECTION A-A

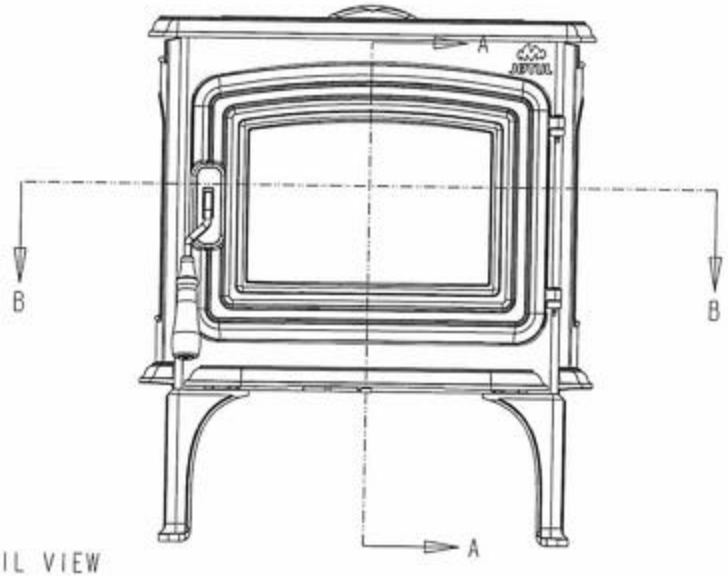

FIREBOX DETAIL VIEW
JØTUL F 35
DWG. 351695D

JØTUL

U.S. ENVIRONMENTAL PROTECTION AGENCY (EPA)
2015 Standards of Performance for New Residential Wood Heaters, New Residential Hydronic Heaters and Forced-Air Furnaces Application
40 CFR PART 60 SUBPARTS AAA AND QQQQ

Disclaimer: The statutory provisions and the EPA regulations described in this document contain legally binding requirements. This document is not a substitute for those provisions or regulations, nor is it a regulation itself. In the event of a discrepancy, please refer to 40 CFR PART 60 Subparts AAA AND QQQQ, Sections 60.533(b), 60.5475(b), and Appendix A–8. This document may be revised periodically without public notice. If you have additional questions, please contact Rafael Sanchez at 202-564-7028 or via email at sanchez.rafael@epa.gov.

Contents

Application for us epa wood heater certification pursuant to 40 cfr PART 60 Subparts AAA and QQQQ 1

Application for A Certificate of Compliance pursuant to 40 cfr PART 60 Subparts AAA and QQQQ 2

2015 Standards of PerfoRmance for New Residential Wood Heaters, new residential hydronic heaters and forced-air furnaces 2

General Information 2

Manufacturer's Authorized Representative INFORMATION 2

EPA-Approved Test Laboratory 3

Compliance Statements and Acknowledgements – Sections 60.533(b) and 60.5475(b) 4

Instructions: Please read the below statements and affirmations and address accordingly. 4

For emissions data summary tables see attachments 4

Wood Burning Heaters 6

I. Test ALT-125 for Certification and Auditing of Wood Heaters 6

A. Summary Results – Adjustable Wood Burning Heaters 6

Weighted average summary ..... **Error! Bookmark not defined.**

Weighted average Final results ..... **Error! Bookmark not defined.**

APPLICATION FOR A CERTIFICATE OF COMPLIANCE PURSUANT TO 40 CFR PART 60 SUBPARTS AAA AND QQQQ

2015 STANDARDS OF PERFORMANCE FOR NEW RESIDENTIAL WOOD HEATERS, NEW RESIDENTIAL HYDRONIC HEATERS AND FORCED-AIR FURNACES

GENERAL INFORMATION

Manufacturer's Name: Jotul

Heater Type (Circle One):	Adjustable Burn Rate Wood Heater	Pellet Stove	Single Burn Rate Heater	Hydronic Heater	Forced Air Furnace	Other:
Hydronic Heater Type (Circle One):	Traditional	Full Storage	Partial Storage	Indoor/Outdoor	Other:	
Forced-Air Furnace Type (Circle One):	Small (less than 65,000 BTU/hr heat output)		Large (greater than 65,000 BTU/hr heat output)		Other:	
Fuel Tested:	Crib	Pellet	Cordwood	Wood Chips	Other:	

Test Method(s) ALT-125 | **Catalyst: No**

Model Name and Design Number (The model name and design number must clearly distinguish one model from another. The name and design number cannot include the EPA symbol or logo or name or derivatives such as "EPA): F35

Physical Address (Street number and Address, not P.O. Box): **55 Hutcherson Drive**	**Mailing Address:** **55 Hutcherson Drive**

City: Gorham	**State: Maine**	**ZIP Code: 04038**
Phone: 207-591-6601	**Email:**	**Website: Jotul.com/us**

EPA Submission Date of 30 day Notice: Submitted January 4, 2021

MANUFACTURER'S AUTHORIZED REPRESENTATIVE INFORMATION

Name: Roger W. Purinton

Position/Title: Research & Development Manager

Address: 55 Hutcherson Drive

City: Gorham	**State: Maine**	**ZIP Code: 04038**
Phone: 207-591-6621	**E-mail: rpurinton@jotulnoamer.com**	**Website: Jotul.com/us**

Remarks:

APPLICATION FOR A CERTIFICATE OF COMPLIANCE PURSUANT TO 40 CFR PART 60 SUBPARTS AAA AND QQQQ
2015 STANDARDS OF PERFORMANCE FOR NEW RESIDENTIAL WOOD HEATERS, NEW RESIDENTIAL HYDRONIC HEATERS, AND FORCED-AIR FURNACES

EPA-APPROVED TEST LABORATORY

Name of Test Laboratory: Polytests Services Inc.		
Name of Person Authorized or Responsible for Conducting Compliance Test: Danick Power		
Position/Title: VP operation		
Address: 695-B Gaudette,		
City: St-Jean-sur-Richelieu	State: Quebec, Canada	ZIP Code: J3B 7S7
Phone: 450 741-3636	Email: dpower@polytests.com	Website: www.polytests.com
Remarks:		

EPA-Approved Third Party Certifier

Name of Certifier Entity: Intertek		
Name of Person Authorized or Responsible for Reviewing Test Report and/or Issuing Certification of Conformity: Charles Meyers		
Position/Title: Certification Manager		
Address: 545 E. Algonquin Road		
City: Arlington Heights	State: Illinois	ZIP Code: 60005
Phone: 312-906-7783	Email: Charles.meyers@intertek.com	Website:
Remarks:		

COMPLIANCE STATEMENTS AND ACKNOWLEDGEMENTS – SECTIONS 60.533(B) AND 60.5475(B)

INSTRUCTIONS: PLEASE READ THE BELOW STATEMENTS AND AFFIRMATIONS AND ADDRESS ACCORDINGLY.

FOR EMISSIONS DATA SUMMARY TABLES SEE ATTACHMENTS

1. **Engineering Drawings Statement**

Complete engineering drawings and specifications of components that may affect emissions (including specifications for each component listed in paragraphs (k)(2), (3) and (4) of 60.533(b) and 60.5475(b) are provided as part of the certification test report. Manufacturers may use assembly or design drawings that have been prepared for other purposes, but must designate on the drawings the dimensions of each component listed in paragraph (k) of this section. No tolerances of components listed in paragraph (k)(2) of 60.533(b) and 60.5475(b) that are different from those specified in that paragraph, and show that such tolerances cannot reasonably be anticipated to cause wood heaters in the model line to exceed the applicable emission limits. The drawing 351695) is provided that identifies how the emission-critical parts, such as the secondary combustion baffle, can be readily inspected and replaced.

2. **Firebox Statement Requirement**

Neither the firebox or any firebox component (including the materials listed in paragraph (k)(3) of 60.533(b) and 60.5475(b) will be composed of material different from the material used for the firebox or firebox component in the wood heater on which certification testing was performed.

3. **CBI**

No information is claimed as CBI in EPA submittal.

4. **Valid Certification Statement**

All documentation is provided pertaining to a valid certification test, including the complete test report and, for all test runs: Raw data sheets, laboratory technician notes, calculations and test results. Documentation includes the items specified in the applicable test methods. Documentation includes discussion of each test run and its appropriateness and validity, and detailed discussion of all anomalies, whether all burn rate categories were achieved, any data not used in the calculations and, for any test runs not completed, the data collected during the test run and the reason(s) that the test run was not completed and why. The burn rate for the low burn rate category was no greater than the rate that an operator can achieve in home use and no greater than is advertised by the manufacturer or retailer. The test report includes a summary table that clearly presents the individual and overall emission rates, efficiencies and heat outputs. The test report and all associated required information, are submitted according to the procedures for electronic reporting specified in § 60.537(f) and 60.5475(f). **Full CBI and NON-CBI report will be provided to the EPA to issue the certificate. NON-CBI report will be available on manufacturer's website.**

5. **Warranties**

Warranty information will be provided in the Owner's manual that will accompany the product. The Owner's manual contains information expressing that the warranties are void if the unit is used to burn materials for which the unit is not certified by the EPA and void if not operated according to the owner's manual.

6. **Q/A Statement**

A quality assurance program for the model line will be created that satisfies the requirements of paragraph (m) of this section

7. **Laboratory Sealing of Unit**

The unit will be sealed by the laboratory following test series and will be keep for at least 5 years by the manufacturer.

8. **Statements that the wood heaters manufactured under this certificate will be—**

(i) The model will be similar in all material respects that would affect emissions as defined in § 60.531 to the wood heater submitted for certification testing, and labeled as prescribed in § 60.536 and 60.5478.

(ii) Each unit produced will be accompanied by an owner's manual that meets the requirements in § 60.536 and 60.5478. In addition, a copy of the owner's manual will be submitted to the Administrator and be available to the public on the manufacturer's web site.

9. **Third Party Certification Statement**

Jotul North America has entered into contracts Polytests Services Inc, an approved test laboratory, and Intertek Testing Services, a third-party certifier in order to satisfy the requirements of paragraph (f) of section 60.533.

10. **Approved laboratory/third party Statement**

The approved laboratory and approved third-party certifier are allowed to submit information on behalf of Jotul North America, including any claimed to be CBI.

11. Manufacturer's Website Certification Test Reports Availability Statement

Jøtul North America will place a copy of the certification test report and summary on it's web site available to the public within 30 days after the Administrator issues a certificate of compliance.

12. Transferability Acknowledgement Statement

Jøtul North America acknowledges that the certificate of compliance cannot be transferred to another manufacturer or model line without written approval by the Administrator.

13. Statement about Selling Wood Heaters without an EPA Certificate

Jøtul North America acknowledges that it is unlawful to sell, distribute or offer to sell or distribute an affected wood heater without a valid certificate of compliance.

ROGER W. PURINTON
RESEARCH & DEVELOPMENT MGR

Print Name and Title:

MARCH 11, 2021

Date:

Signature of responsible representative of the manufacturer certifying the accuracy of the above statements:

Roger W Purinton

The authorized or responsible party whose signature is above is certifying that the manufacturer has complied with and will continue to comply with all requirements of the 2015 NSPS for compliance certification and that the manufacturer remains responsible for compliance regardless of any error by the test laboratory or third-party certifier.

Attachments

Instructions: Please complete the section applicable to your certification request. You may substitute your own data tables in lieu of the ones shown below provided that all the information is captured.

WOOD BURNING HEATERS

I. Test ALT-125 for Certification and Auditing of Wood Heaters

A. SUMMARY RESULTS – ADJUSTABLE WOOD BURNING HEATERS

WEIGHTED AVERAGE SUMMARY

Model name / number	F 35		
Usable Firebox volume	1.57		
Convection air Fan (no, Standard, option)	None		
average for each test run category	L	M	H
burn rate kg/h DB	1,02	1,73	4,45
PM Emission rate - g/h	0,53	0,82	3,07
Co emission rate - g/h	68,00	61,14	113,38
PM Emission 1-hr Rate - g/h	1,71	2,07	4,17
Overall Efficiency - CSA B 415,1			
% HHV Basis	69,0%	68,2%	67,9%
% LHV Basis	74,2%	73,4%	73,0%
Heat output - Btu/hr	13533	22166	59443
Category weighting	0,4	0,4	0,2

WEIGHTED AVERAGE FINAL RESULTS

ASTM E 3053 Weighted averages			
PM Emission Rate - g/h	1,16		
CO Emission Rate g/h	74,3		
PM Emission 1-hr Rate - g/h	2,34		
Overall Efficiency - CSA B415,1			
% HHV Basis	68,47%		
% LHV Basis	73,67%		
Heat output range - Btu/h	13 533	to	59443
Co Arithmetic average g/min	1,35		