JØTUL®

INSTALLATION PLANNING GUIDE

TIMELESS NORWEGIAN CRAFT

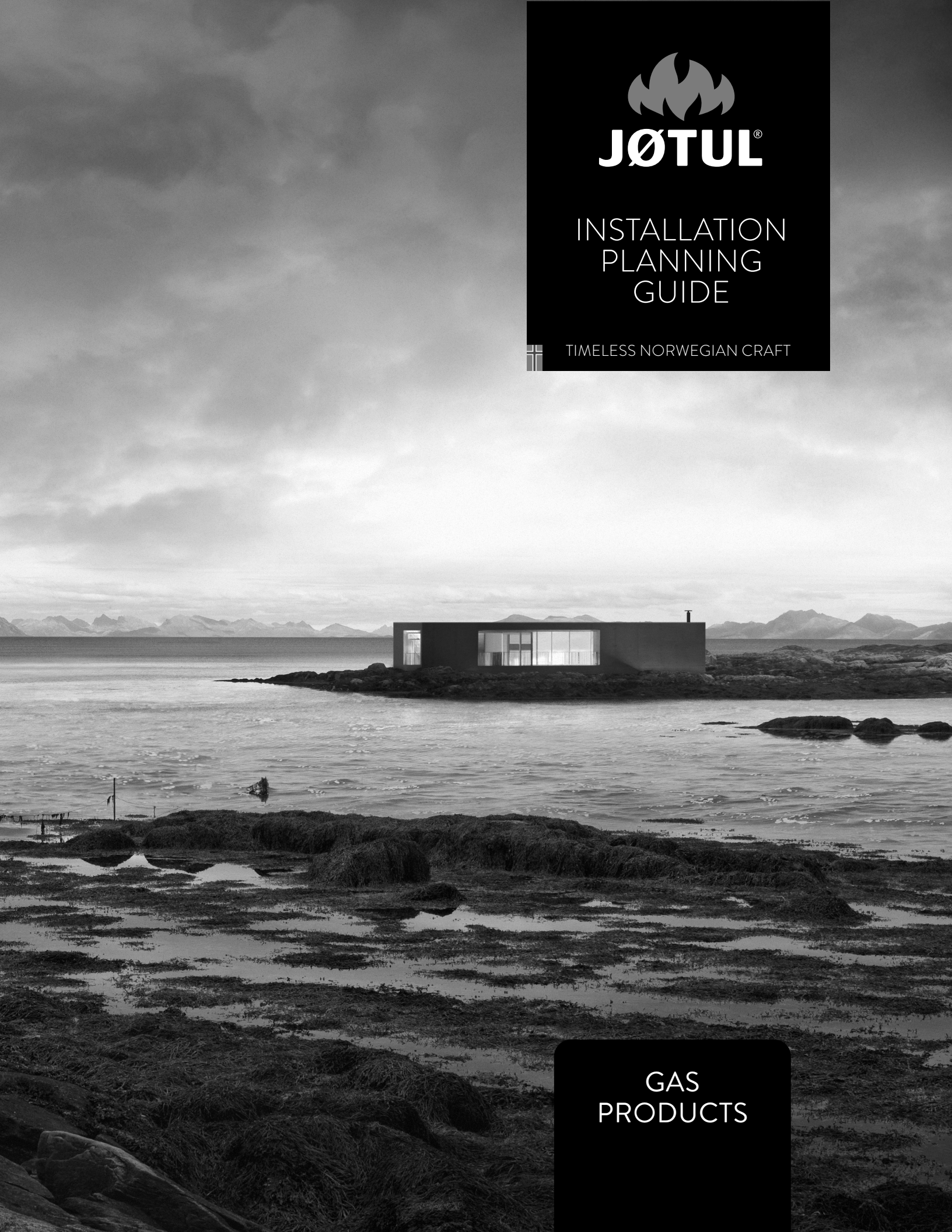

GAS PRODUCTS

We wish you success...

This booklet is intended to provide you with a solid base of information with which to plan the successful installation of your new Jøtul fireplace. Within these pages, you will find complete specifications for each Jøtul gas heater along with general guidelines to help ensure a safe, effective, and trouble-free installation. Your local authorized Jøtul dealer also stands ready to answer any questions you may have and is your best resource for information specific to building codes and other local requirements.

This booklet is not intended to replace the Installation and Operation Manual included with each Jøtul fireplace. Be sure to install your heater according to those instructions.

General Information

Test Standards 4

Installation Requirements 5

Gas Vent Guidelines 6

Direct Vent Stoves

Jøtul GF 160 DV IPI 10

Jøtul GF 200 DV II Lillehammer 12

Jøtul GF 300 DV Allagash 14

Jøtul GF 300 DV IPI Allagash 16

Jøtul GF 305 DV IPI 18

Jøtul GF 370 DVII 20

Jøtul GF 400 DV Sebago 22

Jøtul GF 400 DV IPI Sebago 24

Jøtul GF 500 DV II Portland 26

Jøtul GF 500 DV IPI Portland 28

Direct Vent Fireplace Inserts

Jøtul GI 450 DV II Katahdin 30

Jøtul GI 535 DV IPI New Harbor 32

Jøtul GI 545 DV Winter Harbor 34

Jøtul GI 635 DV IPI Newcastle 36

Jøtul GI 645 DV Astrid 38

B-Vent Stoves

Jøtul GF 300 BV Allagash 40

Jøtul GF 400 BV Sebago 41

General B-Vent Requirements 42

Professional Installation

We at Jøtul North America are dedicated to manufacturing the finest quality hearth products you can be assured will provide many years of safe, dependable service.

To ensure your satisfaction, we recommend that whenever possible our products be installed and serviced by hearth professionals who are certified by the National Fireplace Institute (NFI) or, in Canada, by Wood Energy Technical Training (WETT). Your local Jøtul Authorized Dealer is your best resource for safe and effective installation.

NATIONAL FIREPLACE INSTITUTE®

NFI

CERTIFIED

www.nficertified.org

We recommend that our gas hearth products be installed and serviced by professionals who are certified in the U.S. by the National Fireplace Institute® (NFI) as NFI Gas Specialists.

Test Standards

All Jøtul gas stoves and fireplaces comply with National Safety standards and are tested and listed by Intertek Testing Services of Middleton, Wisconsin to ANSI Z21.88-2002•CSA 2.33-M02 and CAN/CGA 2.17--M91, CSA P.4.-01.2 for Canada.

INTERTEK Warnock Hersey C US

Installation Requirements

Building Codes

Your installation must conform to local codes and our local Jøtul dealer can assist you in determining what is required in your area for a safe and legal installation. Your city or town may require a permit to install a gas burning appliance. Always consult your local building inspector, or authority having jurisdiction, to determine what regulations apply in your area.

Your local officials have final authority in determining if a proposed installation is acceptable. Any requirement that is requested by the local authority having jurisdiction, that is not specifically addressed in this booklet, defaults to local code. In the absence of local codes, the installation requirements must comply with the current National codes. In the U.S., these requirements are established in the National Fuel Code, ANSI Z223.1.(NFPA 54). In Canada, the codes have been established in CAN/CGA B149 Fuel Installation Code.

Location

In selecting a lowcation for the stove, consider the following points:

1) Heat distribution
2) Vent termination requirements
3) Gas supply line routing
4) Traffic areas, furniture, draperies, etc.

Gas heaters may be located on or near conventional construction materials, however, proper clearance to combustibles must be maintained in order to provide adequate air circulation around the appliance. Also, it is important to provide adequate access around the stove for servicing and proper operation.

The clearance and hearth specifications listed in this booklet are the minimum requirements for combustible material. A combustible material is anything that can burn (i.e. sheet rock, wall paper, wood, fabrics etc.). These surfaces are not limited to those that are visible and also include materials that may be located behind non-combustibles.

If you are not sure of the combustible nature of a material, consult your local fire officials. Remember, "Fire Resistant" materials are considered combustible: they are difficult to ignite, but will burn. Also, "fire-rated" sheet rock is considered combustible.

Hearth Requirements

Your gas stove or fireplace should not be installed directly on carpeting, vinyl, linoleum or composite flooring material such as Pergo®.

If the stove will be installed on a combustible material other than wood, floor protection must be installed that is composed of either metal, wood, ceramic tile, or is a listed prefabricated hearth pad. This floor protection must extend the full width and depth of the stove. It is not necessary to remove carpeting, vinyl or linoleum from underneath the floor protection. Exact hearth protection dimensions for each product are specified on THE FOLLOWING PAGES.

Gas Vent Guidelines

General Requirements

All Jøtul gas stoves and fireplaces are approved for use with vent components from the manufacturers listed below:

- Simpson Dura-Vent GS
- Selkirk Metalbestos
- Security Vent Ltd.
- Amerivent Corporation:

Whatever manufacturer you choose, the vent system must conform to the configuration requirements described in the Installation manual for that appliance and be assembled in accordance with the vent manufacturer's instructions.

Use parts of one manufacturer only - don't mix parts from different manufacturers.

All approved vent configurations are derived from extensive testing under controlled laboratory conditions. Gas appliance performance can be negatively affected by variables present in the installation environment, i.e: atmospheric pressure, strong prevailing winds, adjacent structures and trees, snow accumulation, etc. These conditions should be taken into consideration by the installer and stove owner when planning the vent system design.

Direct Vent Systems

A direct vent gas appliance is a closed combustion system, sealed off from the living environment of your home. Outside air flows though a sealed pipe, directly to the burner. Exhaust gas flows back outdoors through a separate sealed pipe. There are two types of Direct Vent systems; Coaxial and Colinear.

Coaxial Vent incorporates the intake air pipe and the exhaust pipe in one conduit. This type of vent is appropriate for any installation except through a fireplace. The vent can terminate vertically through a roof or chase or, horizontally through a wall. See figures 2 and 4. A specific cap is used at the termination depending upon whether it is vertical or horizontal.

Snorkel caps are available for horizontal terminations that require some vertical clearance. See figure 4.

Colinear Vent is intended for vertical termination only and is used when it is necessary to vent a stove or fireplace insert though an existing masonry, or factory-built (ZC) fireplace, or Class A prefabricated chimney. Separate, 3 inch diameter, flexible intake and exhaust pipes are run through the chimney and connect to a coaxial adaptor at the appliance. Use only a Colinear Flexible Vent system approved for use in a solid-fuel burning fireplace. See figure 3.

B-Vent Systems

A B-vent system, otherwise known as natural vent, may be appropriate when it is necessary to vent through an existing masonry or prefabricated chimney or if a direct vent system is not practical. In a B-Vent system, room air is used to support combustion. Exhaust gases pass through an air-insulated, double-wall pipe. An aluminum liner heats up quickly to help maintain high flue temperatures and minimize condensation. The stove itself incorporates a thermo-switch that will shut the burner off in the event of a flue reversal or blockage. B-vent must vertically terminate above the roof line and is subject to height limitation.

B-vent systems are susceptible to influence from environmental conditions which may result in downdrafts. Be aware that stove performance may be affected by differences between atmospheric pressure inside and outside of the house.

The Jøtul GF 300 BV Allagash and the Jøtul GF 400 BV are both approved for use with B-Vent pipe systems.

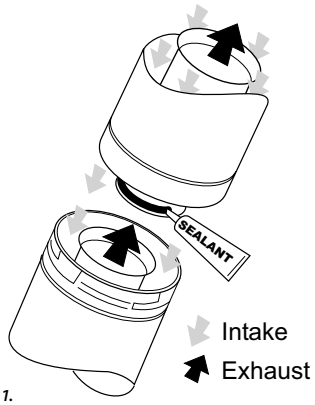

Figure 1.
Coaxial direct vent pipe connection and air flow.

Vent Termination

In designing your vent system, you may need to consider environmental conditions, the physical structure of your home, the location of the stove, cost, aesthetics, and performance.
Your Jøtul dealer is your best resource for information and will be happy to help you determine the type of system that best meets your needs.

Vertical or Horizontal?

Horizontal termination may allow greater flexibility in locating the heater than a vertical vent, because direct vent stoves can vent through a wall.

Vertical termination can allow you to take advantage of an existing chimney or fireplace. Vertical vent that passes through open living areas in other rooms must be enclosed.

Both types of systems are subject to limitations in height and in length of horizontal runs. These limitations are specific to the particular stove or fireplace. Check the Vent Termination Diagrams in this book for the requirements of each Jøtul gas heater.

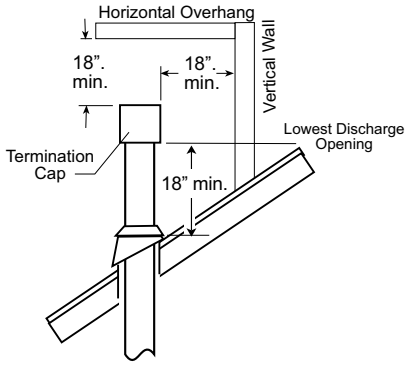

Figure 2. Minimum vertical termination height and roof clearance.

- IMPORTANT: Follow the vent manufacturer's installation instructions provided with each vent component.

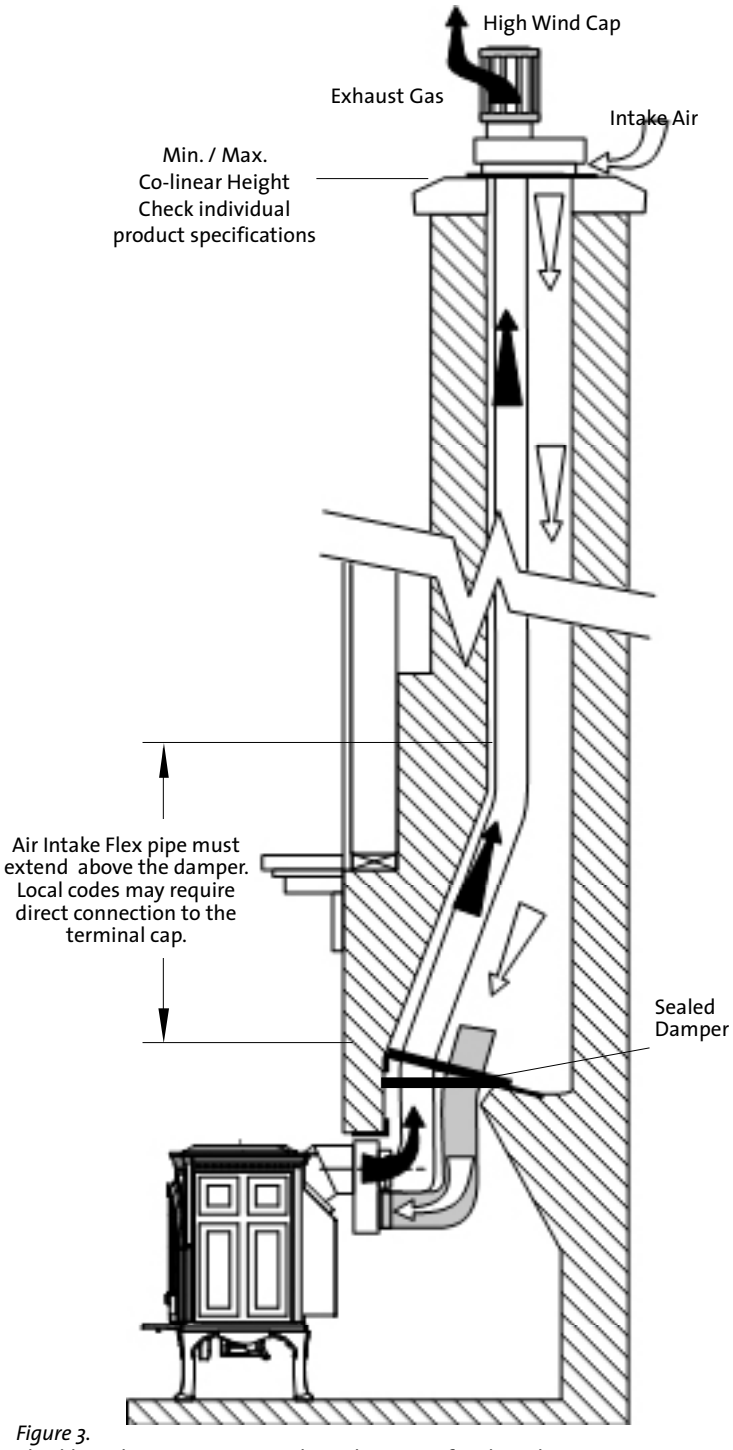

Figure 3.
Flexible Co-linear Vent System through existing fireplace chimney.

Vertical Venting Requirements (Vertical Termination)

Check the minimum and maximum vent height specifications of the stove you are considering and confirm that these limitations pose no problem.

With steep roofs, nearby trees, and predominant windy conditions, poor draft or down draft conditions can occur. In these cases, increasing the height of the vent may improve performance. NOTE: Vertical termination may result in reduced flame height and heat output due to the "suction" of natural draft.

It may be necessary to add restriction to a vertical venting installation, so that the draft is not too strong and creates incomplete combustion. Check the vent restriction requirements of the particular stove you are considering.

If an offset or elbow is necessary in the vertical rise, it is important to support the vent pipe every three feet with the pipe manufacturer's wall straps to avoid excessive stress on the offsets.

Whenever possible use 45° elbows opposed to 90° elbows. This offers less restrictions for the flow of flue gases and intake air.

A firestop is required at every floor. The opening should be framed to 10" X 10" inside dimension. Use firestops supplied by the vent pipe manufacturer.

Any venting that is exposed above the first floor, regardless of attic space or living space, must be enclosed. Always maintain the required 1" clearance from all sides of the vertical vent system.

Horizontal Venting Requirements

Follow these guidelines if any part of the installation incorporates a horizontal run or terminates horizontally.

Check the minimum and maximum horizontal run limitations of the particular stove you are considering. See fig. 4.

The horizontal termination cap must maintain a 3" clearance to any overhead combustible projections exceeding 2 1/2" or less. Maintain 12" clearance from projections exceeding 2 1/2". See fig. 7. See fig. 6 for complete termination clearance information.

Any horizontal run of vent must have a 1/4" vertical rise for every foot of horizontal run toward the termination cap. Be sure to include this rise factor when determining the center of the wall cut-out, fig.4, C. Never allow vent pipe to slope downward to the termination as high temperatures may create a hazardous condition.

Wall Pass-through: The vent manufacturer's Wall Thimble must be used to pass vent pipe through an exterior wall. Specifically designed for this purpose, the thimble will act as both a firestop and heat shield while maintaining proper clearance between the vent pipe and adjacent combustible materials. The wall opening must be framed in to the vent manufacturer's specifications. See fig. 5.

Optional decorative plates are available to finish the interior side of the wall pass-through.

DO NOT FILL AIR SPACE WITH ANY TYPE OF INSULATION.

Do not recess the termination cap into a wall or siding.

Install a Vinyl Siding Standoff between the vent cap and the exterior wall to protect vinyl siding from overheating.

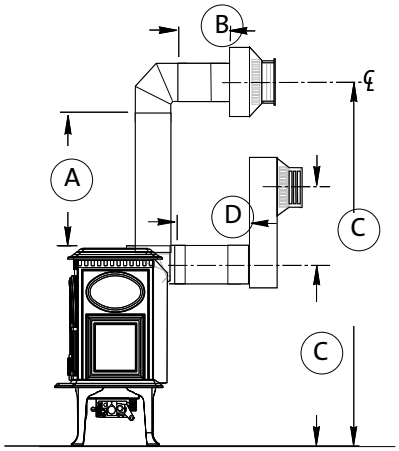

Figure 4. Check these critical dimensions for horizontally terminated vent systems.

A: Min./Max. Vertical Run
B: Max. Horizontal Run
C: Wall Cutout Centerline
D: Min./Max Horizontal Run to Snorkel

Minimum Clearances between Vent Pipe and Combustible Materials:

Horizontal Run:

Off the top of the pipe: 2"

Off the sides and bottom: 1"

Vertical Run:

All sides: 1"

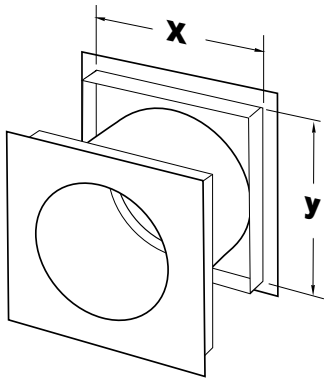

Figure 5. Wall cut-out specifications for direct vent wall thimbles may vary by manufacturer.

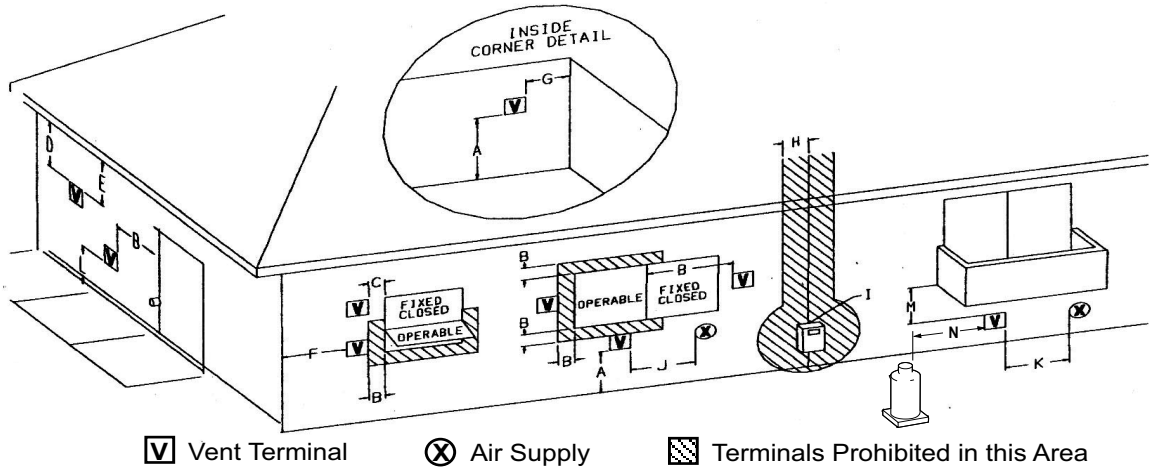

Figure 6. Vent Terminal Clearances - National Fuel Gas Code.

A = Clearance above grade, veranda, porch , deck, or balcony : *12 inches minimum.

B = Clearance to window or door that may be opened:
9 inches min./U.S.
*12 inches min./ CAN
We recommend 12 inches minimum to help prevent condensation on the window.

C = Clearance to permanently closed window: 9 inches min./U.S.
*12 inches min./ CAN
We recommend 12 inches minimum to help prevent condensation on the window.

D = Vertical clearance to ventilated soffit located above the terminal within a horizontal distance of 2 feet from the centerline of the terminal: 18 inchesminimum.

E = Clearance to unventilated soffit: 12 inches minimum.

F = Clearance to outside corner: 9 inches min. Jøtul N.A. strongly recommends 12 inches, particularly where windy conditions are prevalent.

G = Clearance to inside corner: 6 inches minimum. Jøtul N.A. strongly recommends 12 inches, particularly where windy conditions are prevalent.

H = *Not to be installed above a meter/ regulator assembly within 3 feet horizontally from the centerline of the regulator.

I = Clearance to service regulator vent outlet: U.S. - 5 feet
CAN. - 6 feet minimum.

J = Clearance to nonmechanical air SUPPLY INLET to building or the combustion air inlet to any other appliance: *12 inches minimum.

Clearance to fuel oil filler pipe vents: 5 feet min.

K = Clearance to a mechanical air supply inlet:
*6 feet minimum.

L = ** Clearance above paved sidewalk or a paved driveway located on public property:
*7 feet min.

M = Clearance under veranda, porch, deck, or balcony:
*12 inches minimum.[1]

* As specified in CGA B149 Installation Codes. Note: Local Codes and Regulations may require different clearances.

** A vent shall not terminate directly above a sidewalk or driveway which is located between two single family dwellings and serves both dwellings.*

[1] Only permitted if veranda, porch, deck, or balcony, is fully open on a minimum of two sides beneath the floor.* A screened-in porch or balcony is not considered to be open.

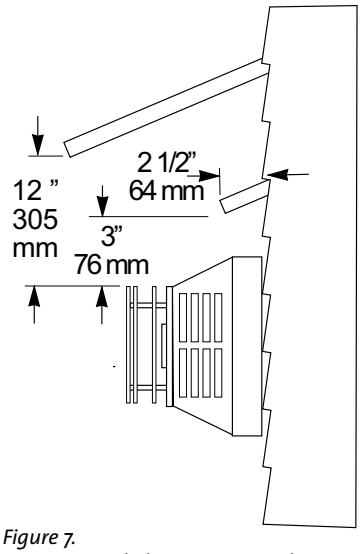

Figure 7.
Vent Terminal Clearances - Overhangs

GF 160 DV IPI JøtulBurner™ Rates

Natural Gas
24,000 BTU/hr. maximum input
15,800 BTU/hr. minimum input

Propane
24,000 BTU/hr. maximum input
19,800 BTU/hr. minimum input

GF 160 DV IPI Clearance Requirements

		Measured From:
Rear:	2”	Rear Shroud
Cieling:	33 1/2”	Top Plate
Corner:	3 3/8”	Side Plate
Sides:	7 3/8”	Side Plate

Alcove Installation

Maximum Alcove Depth:
24”

Minimum Alcove Width:
32 1/2”

Minimum Ceiling Height From Stove Top:
69”

Hearth Protection

Width: 18”

Depth: 18”

Mantel Clearances

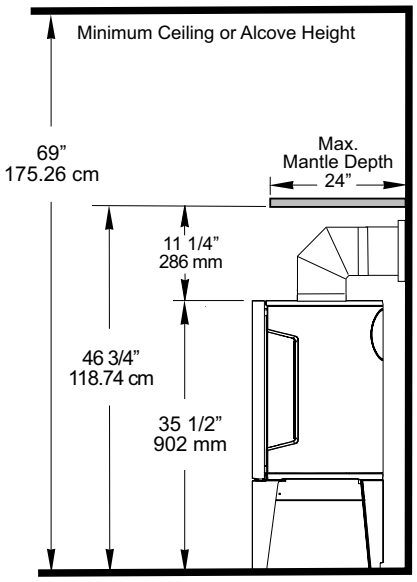

Figure 9. Mantel and Ceiling Clearances.

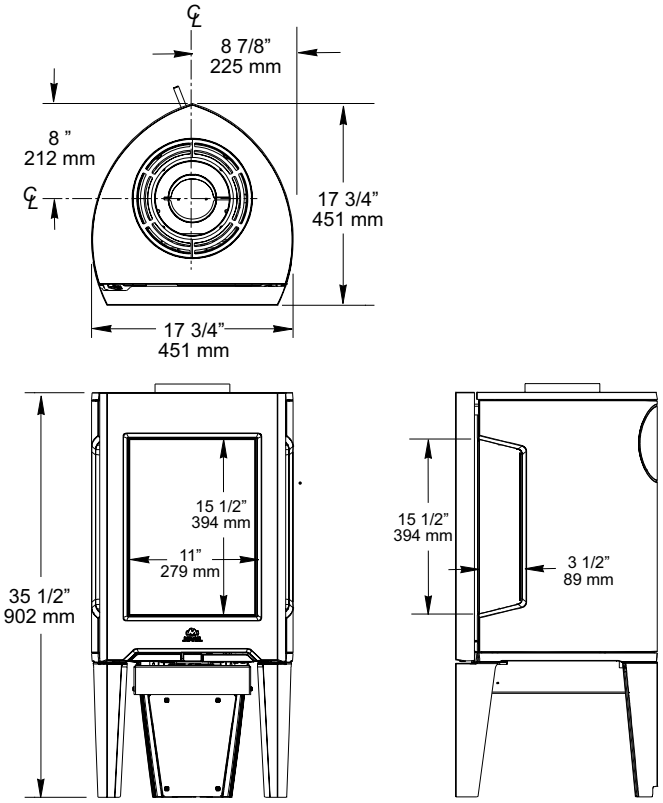

Figure 8. GF 160 DV IPI dimensions

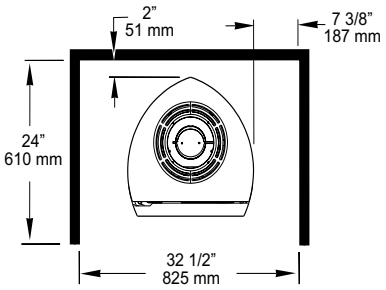

Figure 10. Alcove Clearances.

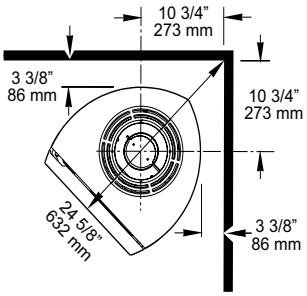

Figure 11. Corner Wall clearances.

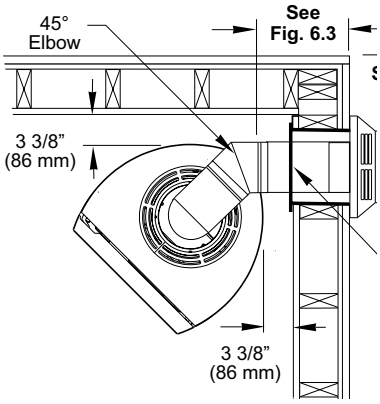

Figure 12.
Horizontal termination clearance to exterior corner.

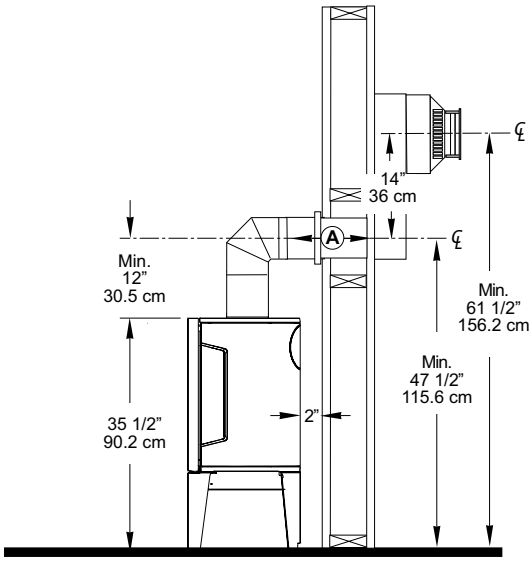

Figure 13. 14" Snorkel termination.

14" snorkel will require 12 " vent off stove to meet minimum rise requirements.

2 ft. max horizontal run (A) to snorkel termination.

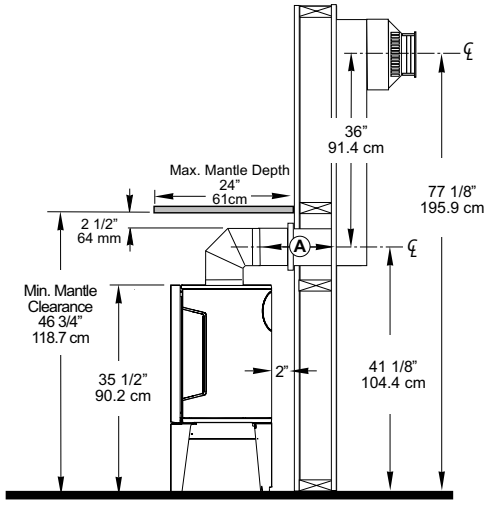

Figure 14. 36" Snorkel termination and mantle clearance.

2 ft. max horizontal run (A) to snorkel termination.

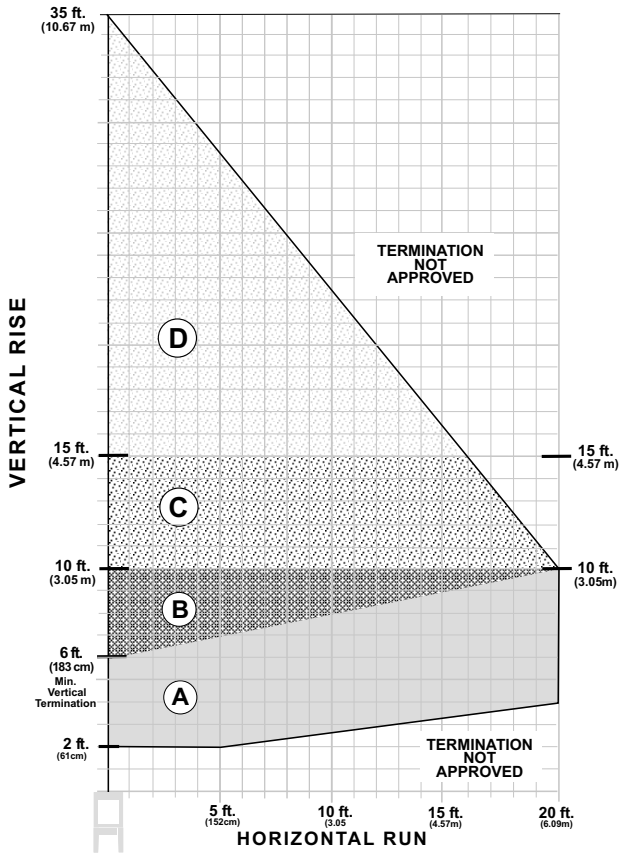

Figure 15.
GF 160 DV IPI
Vent Termination Diagram

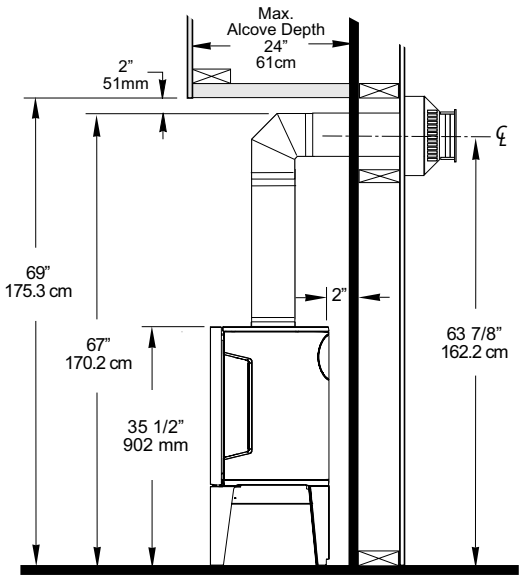

Figure 16 Minimum vent required for horizontal termination.

Any horizontally terminated vent run must include a minimum 2 ft. vertical rise.

At minimum vertical run, the total horizontal run (A) must not exceed 5 ft.

GF 200 DV II Lillehammer JøtulBurner™ Rates

Natural Gas
20,000 BTU/hr. maximum input
11,400 BTU/hr. minimum input

Propane
18,000 BTU/hr. maximum input
8,450 BTU/hr. minimum input

GF 200 DV II Lillehammer Clearance Requirements

Rear:	0”
Ceiling:	42 1/2”
Corner:	2”
Sides:	3”

Alcove Installation

Maximum Alcove Depth:
24”

Minimum Alcove Width:
34”

Minimum Ceiling Height:
67”

With long leg kit:
44 1/2”

Hearth Protection

Width: 24”
Depth: 18”

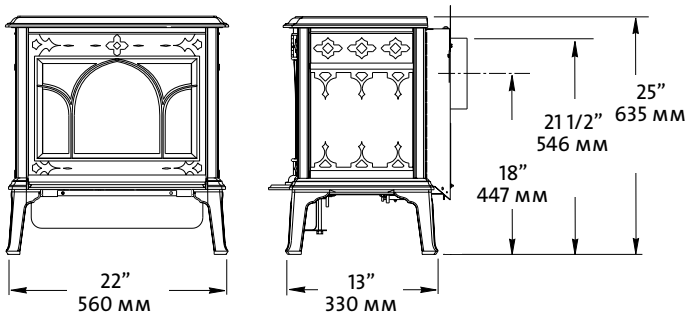

Figure 17.
GF 200 DV II Lillehammer dimensions

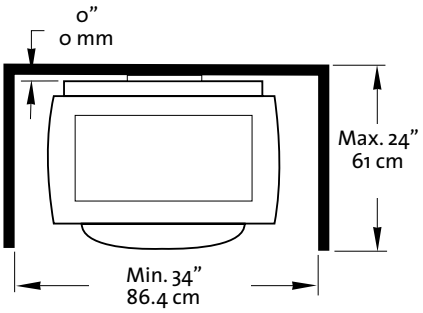

Figure 19.
GF 200 DV II Alcove specifications.

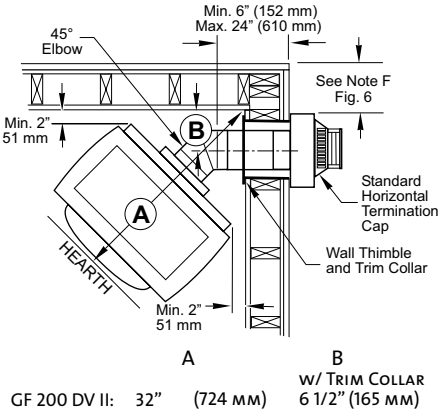

Figure 20.
GF 200 DV II Corner with 45° elbow.

Mantel Clearances

Figure 18.
Clearances with rear shroud of stove installed flush with fireplace face.

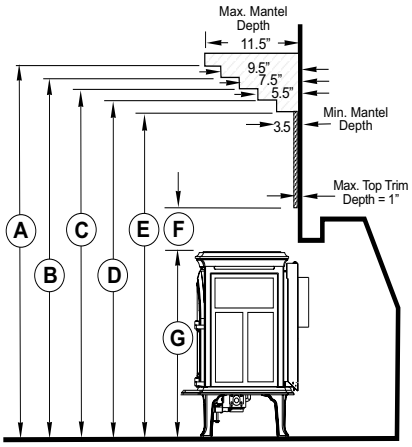

Figure 21 Clearances with stove installed no more than 6 1/2” into fireplace.

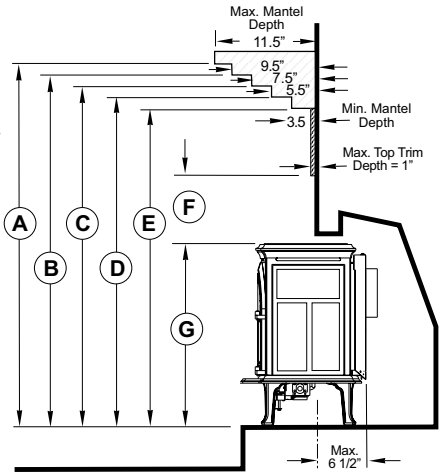

	GF 200 DV II Lillehammer
A	52 1/2 in.
B	51 in.
C	49 1/2 in.
D	48 in.
E	46 1/2 in.
F	4 1/2 in.
G	25 in. Long Legs: 27 1/4 in.

	GF 200 DV II Lillehammer
A	52 1/2 in.
B	50 in.
C	48 1/2 in.
D	47 in.
E	45 1/2 in.
F	17 1/2 in.
G	25 in. Long Legs: 27 1/4 in.

GF 200 DV II Leg Options

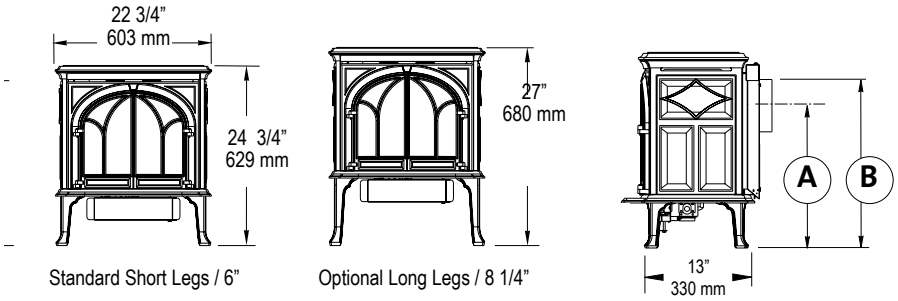

Standard Short Legs / 6"

Optional Long Legs / 8 1/4"

	A	B
Standard Legs:	18"	21 1/2"
Long Legs:	20 1/4"	29 3/4"

Figure 22 GF 200 DV II Rear Exit Centerlines and Collar Height

Venting Requirements

Figure 23.
GF 200 DV II
Vent Termination Diagram

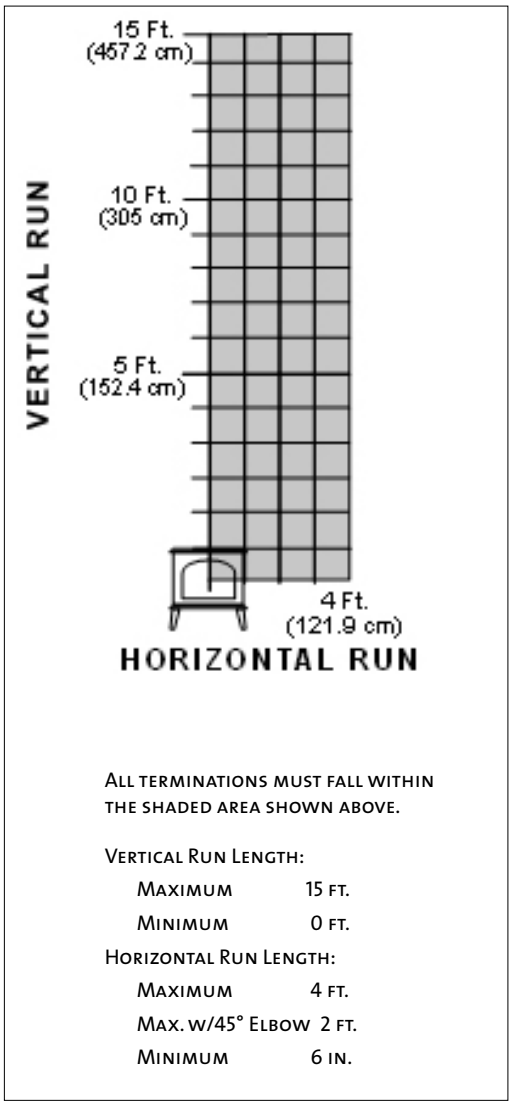

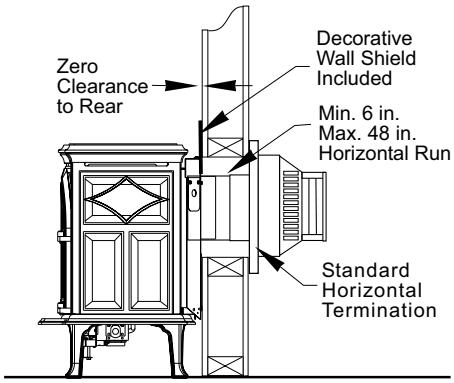

Figure 24.
GF 200 DV II
Min./Max. Horizontal Run

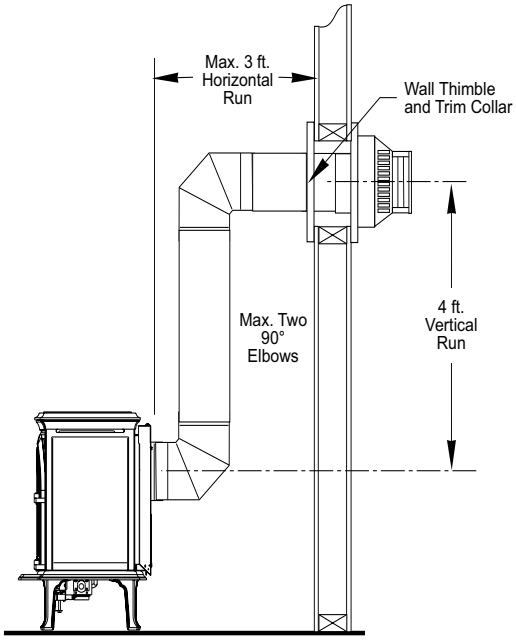

Figure 25.
GF 200 DV II Horizontal Termination with Vertical Rise

GF 300 DV Allagash JøtulBurner™ Rates

Natural Gas
26,000 BTU/hr. maximum input
14,000 BTU/hr. minimum input

Propane
26,000 BTU/hr. maximum input
14,000 BTU/hr. minimum input

GF 300 DV Allagash Clearance Requirements

Rear:	2”
Ceiling:	33 1/4”
Corner:	2”
Sides:	3”

Alcove Installation

Maximum Alcove Depth: 24”

Minimum Alcove Width: 36 ”

Minimum Ceiling Height: 61”

With Short Legs (6”): 58 3/4”

Hearth Protection

Width: 24”

Depth: 14”

Snorkel Termination

14” Snorkel: Horizontal run must include no more than one 12” section. One 45° elbow is permitted.

36” Snorkel: Max. Horizontal run is 6 ft.

Exhaust Restriction - Do not use exhaust restriction

* Note: It is always preferable to maintain the vertical vent rise inside the house, particularly in cold, windy climates.

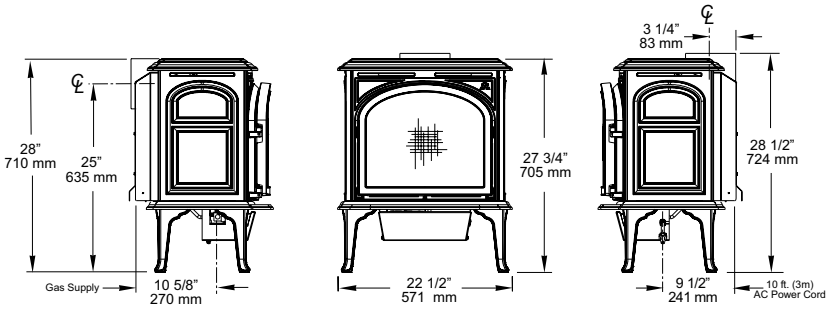

Figure 26 . GF 300 DV Allagash Critical Dimensions. Subtract 2 1/4” from height for Short Leg option.

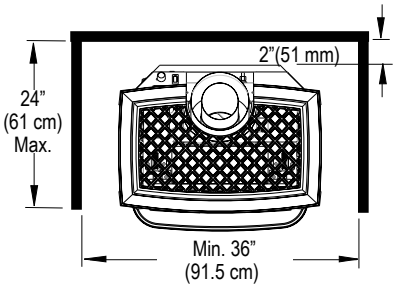

Figure 27. Alcove Installation Clearances.

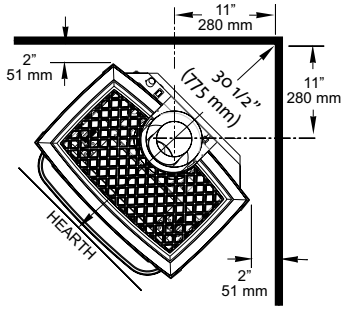

Figure 28. Corner installation Top Exit vent adaptor centerline at minimum clearance.

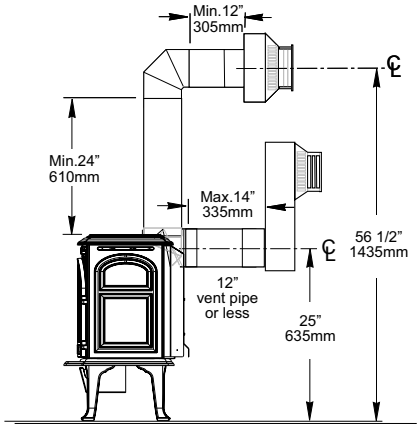

*Figure 29. **

- *Minimum vent for horizontal termination.*
- *14” Maximum horizontal run directly off rear of stove with 14” Snorkel termination.*

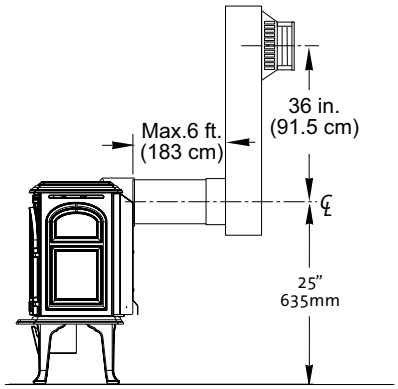

*Figure 30. **
Maximum Horizontal with 36” Snorkel Termination.

Figure 31.
Corner Installation at min. clearance with Snorkel Termination.

A : 30 1/2”

B : 6 1/2” with Trim Collar

C : 14” Snorkel
Min. 6”
Max. 14”

C : 36” Snorkel
Min. 6”
Max. 6’

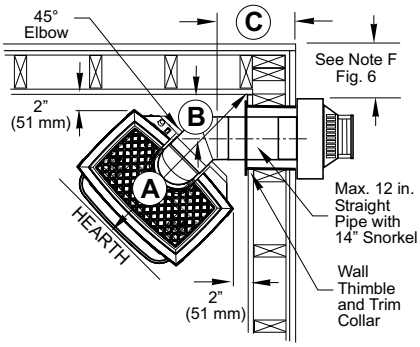

Mantel Clearances

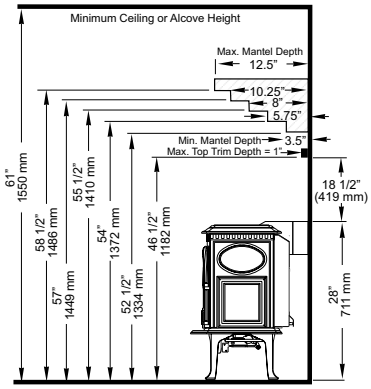

Figure 32.

Stove shown with standard legs. With Short Legs, subtract 2 1/4” from the clearances indicated.

Vent Terminations

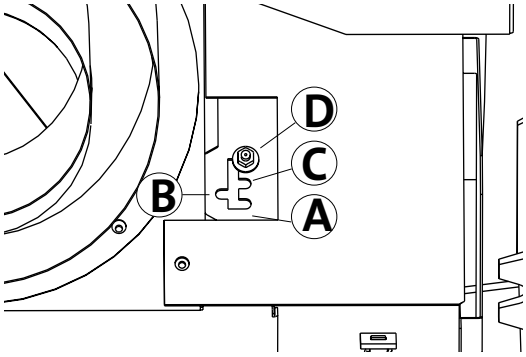

Figure 33. Exhaust restrictor positions - viewed from front with top plate removed.

Vent Termination for Natural Gas

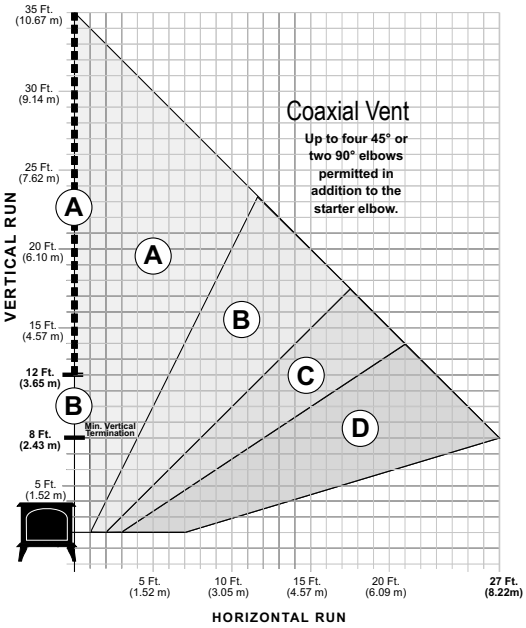

Figure 34.
Coaxial Vent Termination / NG

- All venting must terminate (end) within one of the shaded areas.
- Letter designations define zones for different vent restrictor settings. Consult the installation manual for specific information.

Colinear Vent

- Max. Offset: 2 ft.

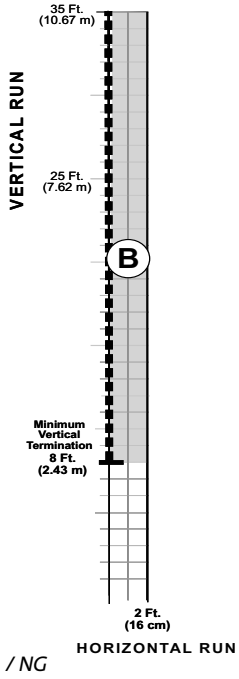

Figure 35
Colinear Termination / NG

Vent Termination for Propane

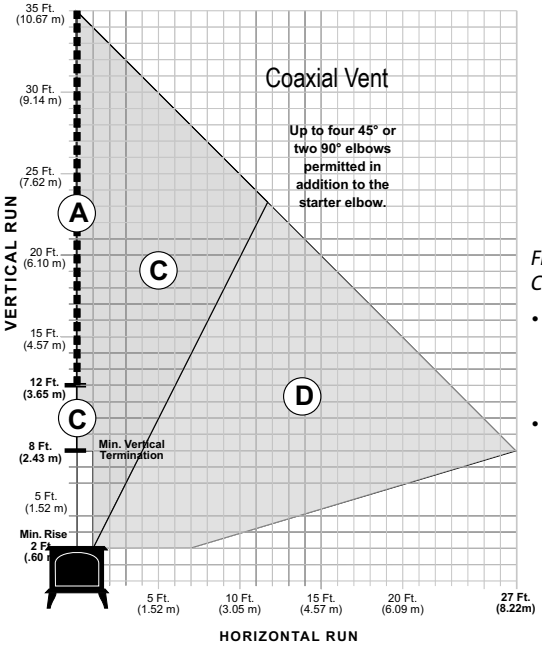

Figure 37.
Coaxial Vent Termination / LP

- All venting must terminate (end) within one of the shaded areas.
- Letter designations define zones for different vent restrictor settings. Consult the installation manual for specific information.

Colinear Vent

- Max. Offset: 2 ft.

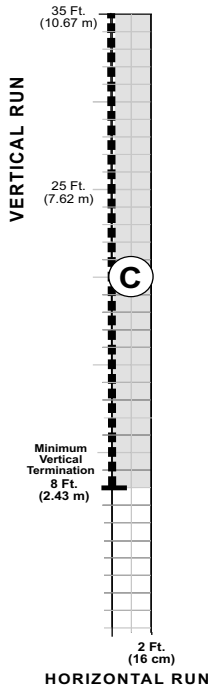

Figure 38.
Co-linear Termination / LP

GF 300 DV IPI Allagash JøtulBurner™ Rates

Natural Gas
26,000 BTU/hr. maximum input
15,000 BTU/hr. minimum input

Propane
24,000 BTU/hr. maximum input
12,000 BTU/hr. minimum input

GF 300 DV IPI Allagash Clearance Requirements

Rear:	2”
Ceiling:	33 1/4”
Corner:	2”
Sides:	3”

Alcove Installation

Maximum Alcove Depth: 24”

Minimum Alcove Width: 36 ”

Minimum Ceiling Height: 61”

With Short Legs (6”): 58 3/4”

Hearth Protection

Width: 24”

Depth: 14”

Snorkel Termination

14” Snorkel: Horizontal run must include no more than one 12” section. One 45° elbow is permitted.

36” Snorkel: Max. Horizontal run is 6 ft.

Exhaust Restriction - Do not use exhaust restriction

* Note: It is always preferable to maintain the vertical vent rise inside the house, particularly in cold, windy climates.

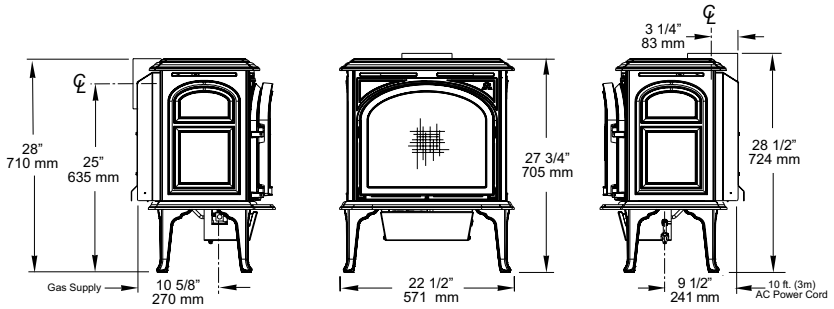

Figure 39 . GF 300 DV IPI Allagash Critical Dimensions. Subtract 2 1/4” from height for Short Leg option.

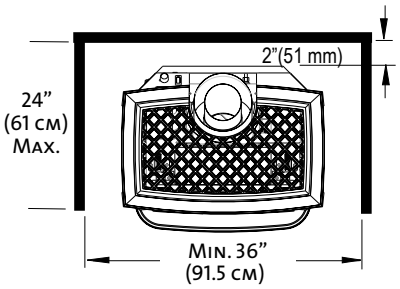

Figure 40. Alcove Installation Clearances.

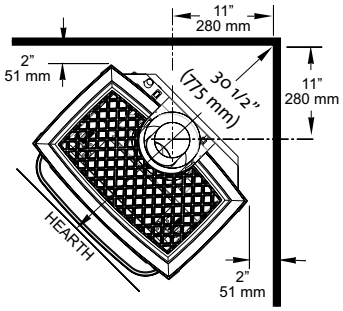

Figure 41. Corner installation Top Exit vent adaptor centerline at minimum clearance.

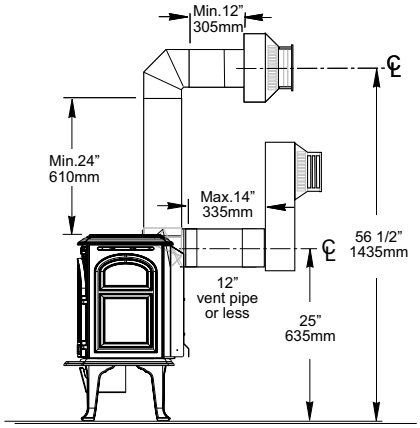

Figure 42.

- *Minimum vent for horizontal termination.*
- *14” Maximum horizontal run directly off rear of stove with 14” Snorkel termination.*

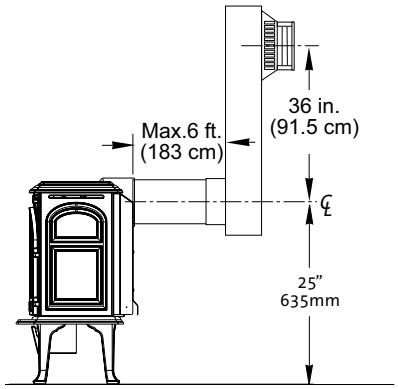

Figure 43.
Maximum Horizontal with 36” Snorkel Termination.

Figure 44.
Corner Installation at min. clearance with Snorkel Termination.

A : 30 1/2”

B : 6 1/2” with Trim Collar

C : 14” Snorkel
Min. 6”
Max. 14”

C : 36” Snorkel
Min. 6”
Max. 6’

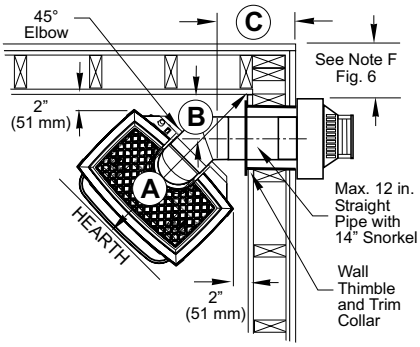

Mantel Clearances

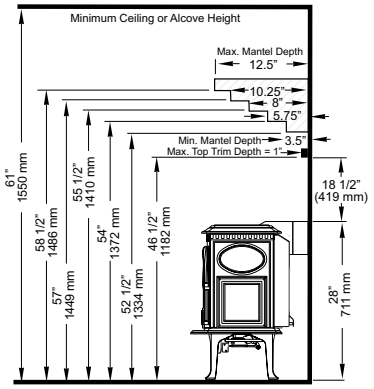

Figure 45.

Stove shown with standard legs. With Short Legs, subtract 2 1/4” from the clearances indicated.

Vent Termination for Natural Gas and Propane

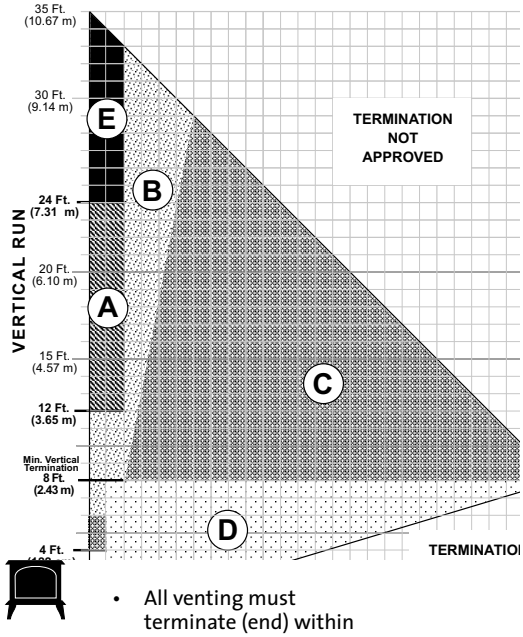

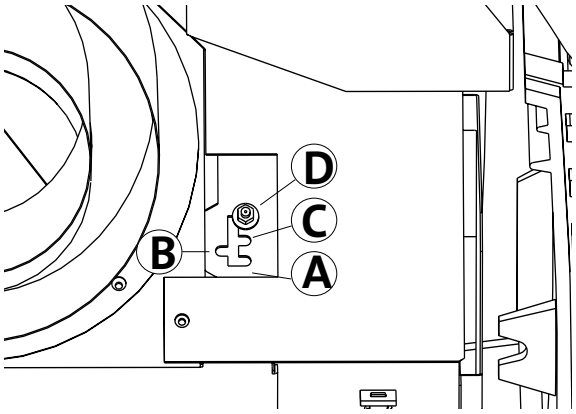

Figure 46. Exhaust restrictor positions - viewed from front with top plate removed.

- All venting must terminate (end) within one of the shaded areas.
- Letter designations define zones for different vent restrictor settings. Consult the installation manual for specific information.

Burner Skirt Attachments

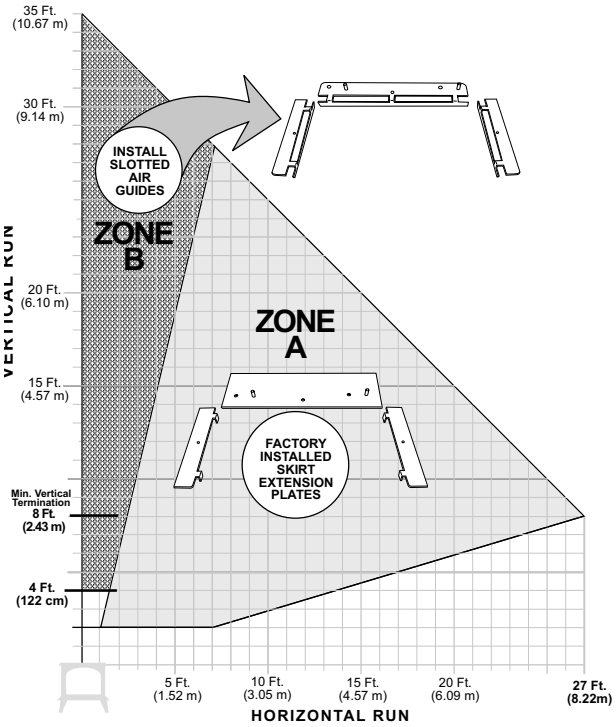

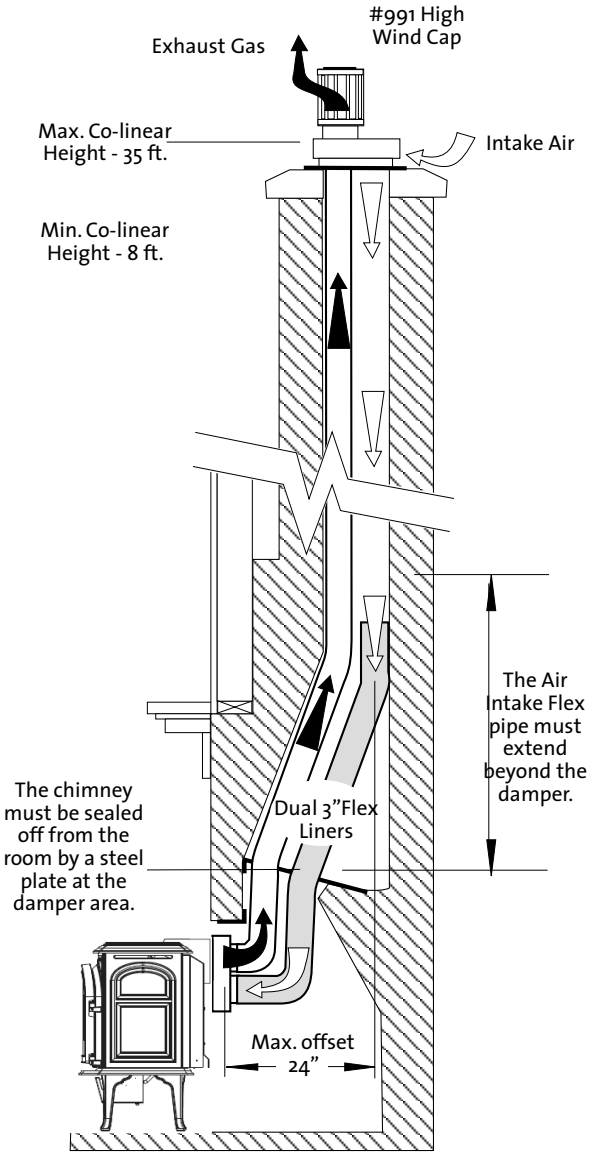

Figure 47. Co-linear Adaptor installed through a masonry chimney. Simpson Dura-Vent components shown.

GF 305 DV IPI JøtulBurner™ Rates

Natural Gas

28,000 BTU/hr. maximum input
18,707 BTU/hr. minimum input

Propane

28,000 BTU/hr. maximum input
22,370 BTU/hr. minimum input

GF 305 DV IPI Clearance Requirements

		Measured From:
Rear:	2”	Rear Shroud
Cieling:	24 1/2”	Top Plate
Corner:	3”	Side Plate
Right Side:	2”	Side Plate
Left Side:	6”	Side Plate

Alcove Installation

Maximum Alcove Depth:
24”

Minimum Alcove Width:
30”

Minimum Ceiling Height From Stove Top:
24 1/2”

Hearth Protection

Width: 24”
Depth: 18”

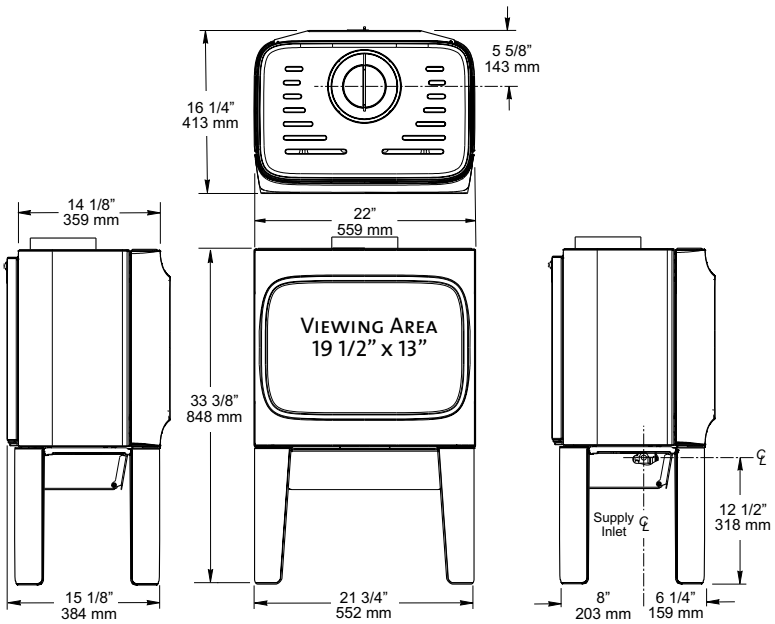

Figure 48. Dimensioned views, GF 305 DV IPI

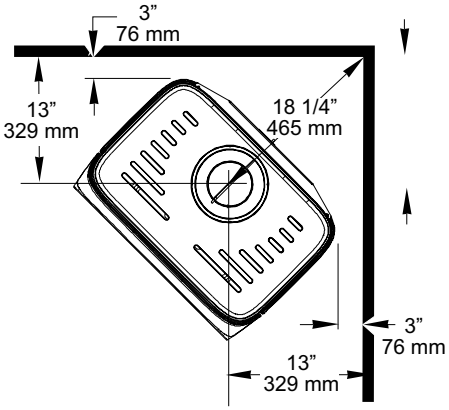

Figure 50. Corner clearances.

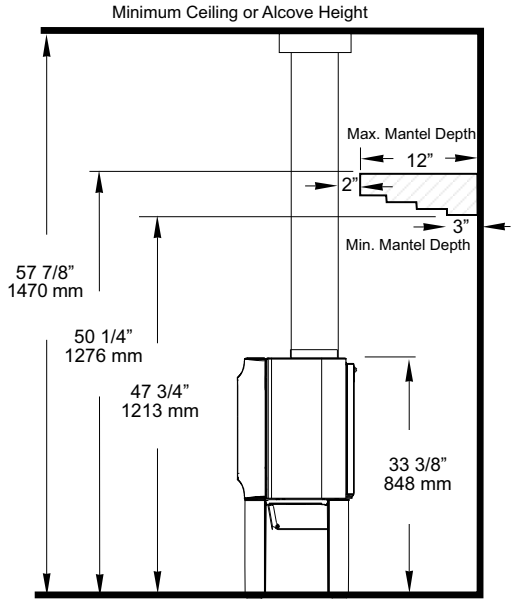

Figure 49. Mantel Clearances from stove and venting.

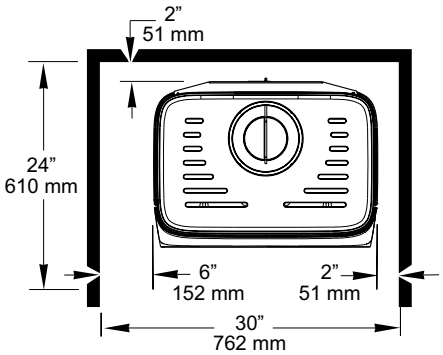

Figure 51. Alcove Clearances.

Venting Requirements

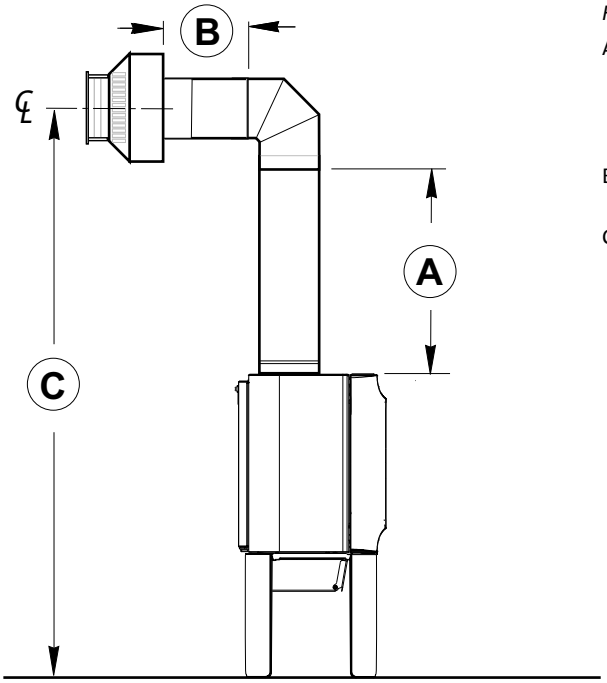

Figure 52. Minimum vent required for horizontal termination.

A: Any horizontally terminated vent run must include a minimum vertical rise (A) off the stove of 18 in.

* We strongly suggest a minimum 24 in. (610 cm) vertical rise for any horizontally terminated vent run.

B: At minimum vertical rise the horizontal run (B) must not exceed 6 in.

C: Termination Center Line at 18 in. minimum rise: 61 3/4 in.

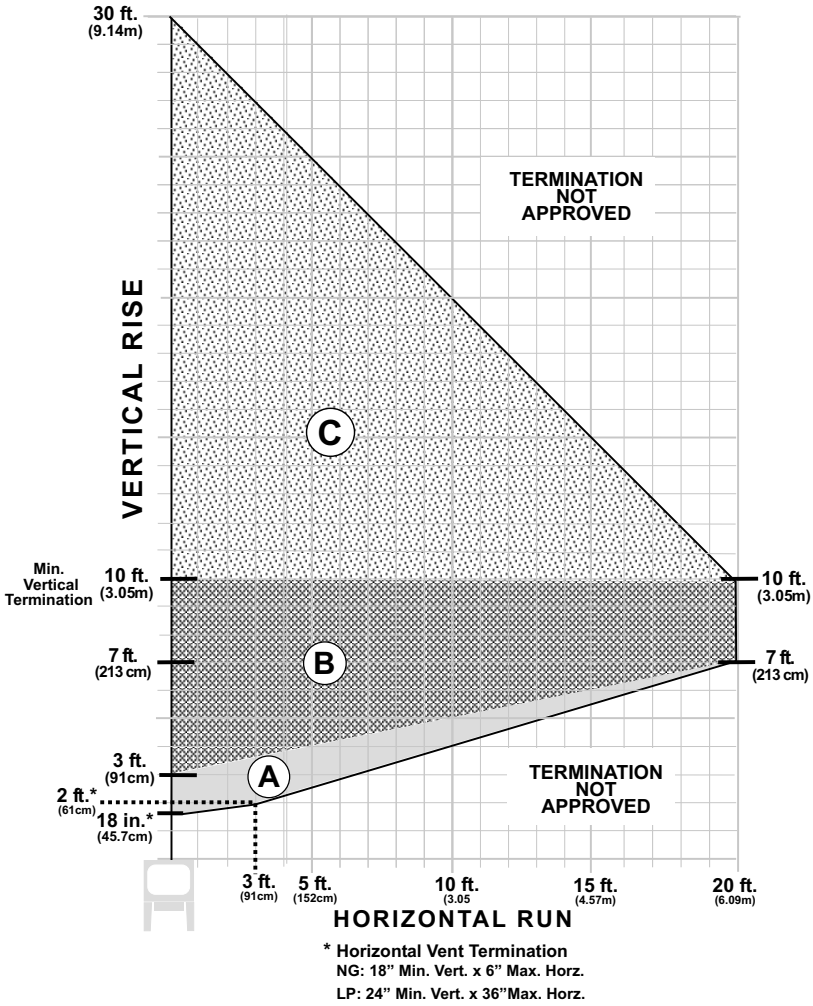

Figure 54. Vent Termination Zone Matrix - NG / LP NG & LP: 18" Min. Vertical x 6" Max. Horizontal

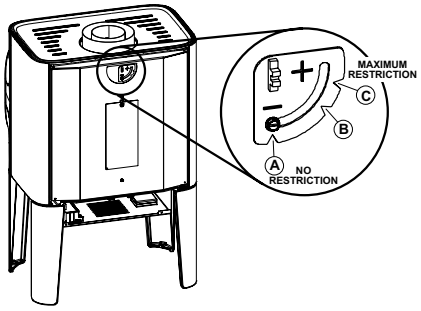

Figure 53.
Use 1/4" socket driver to loosen the Exhaust Restrictor dial and adjust it to set the screw at the appropriate notch for your termination zone.

GF 370 DV II JøtulBurner™ Rates

Natural Gas

28,000 BTU/hr. maximum input
18,170 BTU/hr. minimum input

Propane

24,000 BTU/hr. maximum input
20,750 BTU/hr. minimum input

Clearance Requirements

Rear:	3”
Ceiling:	16 3/4”
Corner:	5”
Sides:	7”

Alcove Installation

Max. Alcove Depth: 21 3/4”

Min. Alcove Width: 31 1/4”

Min. Ceiling Height: 62 1/4”

Hearth Protection

Width: 27”

Depth: 14”

Snorkel Termination

Snorkel Terminations (14” or 36”) NATURAL GAS ONLY. DO NOT USE SNORKEL TERMINATION WITH PROPANE FUEL.

14” Snorkel: Max. Horizontal run must not exceed a 24” section of pipe and must be a minimum of 12”

36” Snorkel: Max. Horizontal run is 5 ft.

Exhaust Restriction - Do not use exhaust restriction

* Note: It is always preferable to maintain the vertical vent rise inside the house, particularly in cold, windy climates.

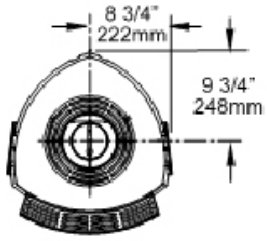

Figure 55. GF 370 DV II Dimensions.

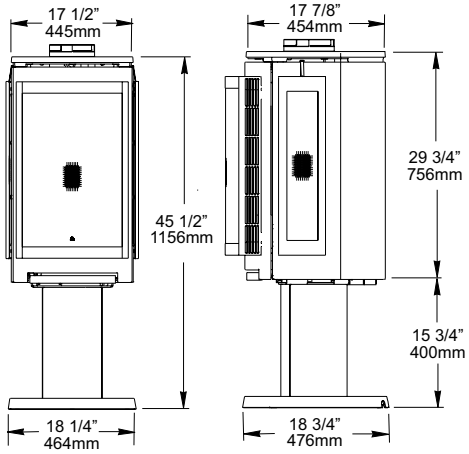

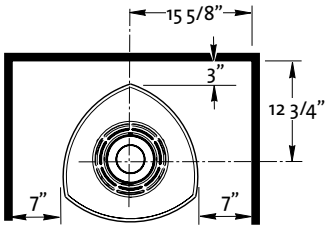

Figure 56. Alcove Installation Clearances.

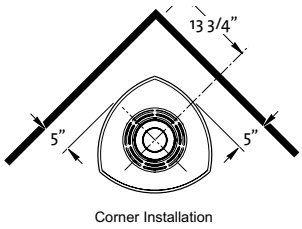

Figure 57. Corner installation Top Exit vent adaptor centerline at minimum clearance.

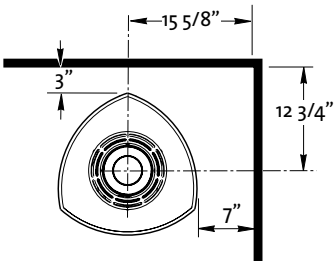

Figure 58. Parallel Wall Clearances.

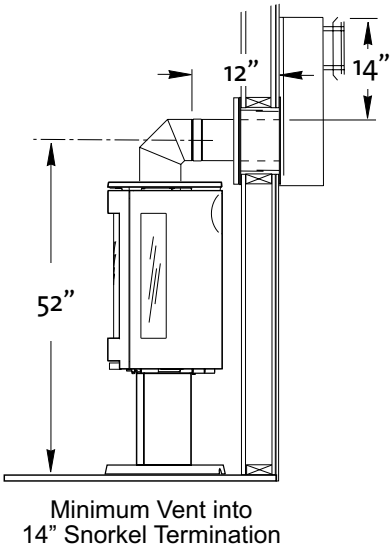

Figure 59. Minimum vent pipe sections required for a 14” Snorkel termination - NATURAL GAS ONLY.

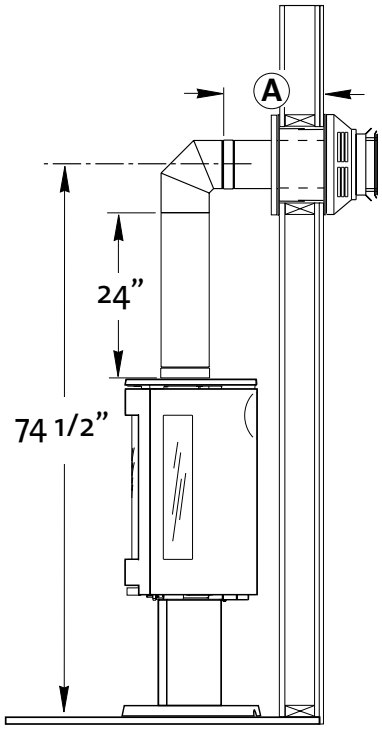

Figure 60. Minimum vent pipe sections required for horizontal termination:
A = 12” with NG
18” with LP

A maximum of two 90° or four 45° elbows may be used. Whenever possible, use 45° elbows instead of 90° elbows as these offer less restriction to the flow of flue gases and intake air. Use of elbows may adversely affect IPI functionality. In such cases, CPI mode should be used.

Reduce the overall horizontal run by 5 feet for each additional 45° and 90° elbow.

When two or more elbows are used in a horizontal run, a less restricted setting may be more effective than that indicated by the termination zone diagram.

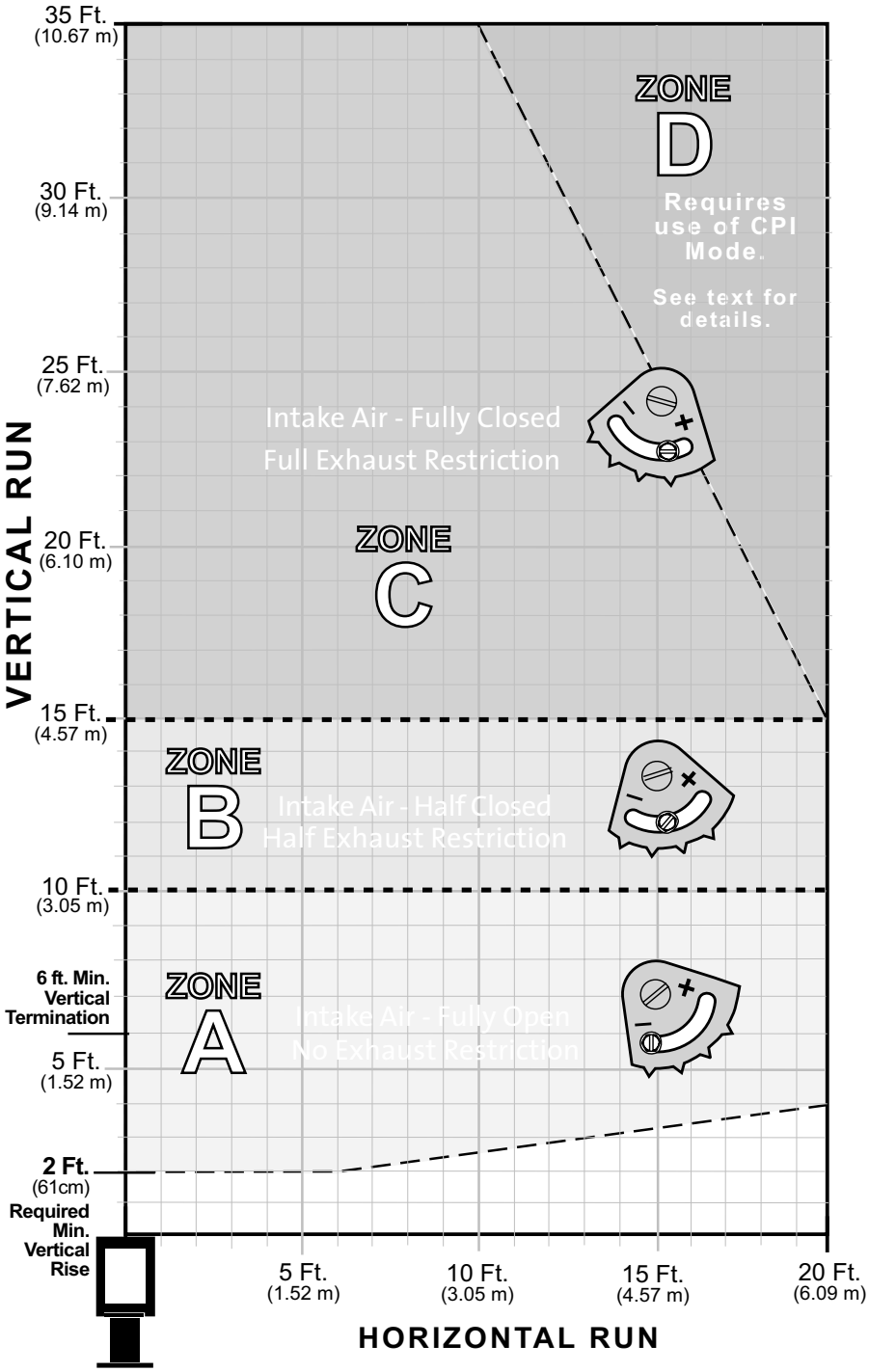

Figure 62 . Vent Termination Diagram.

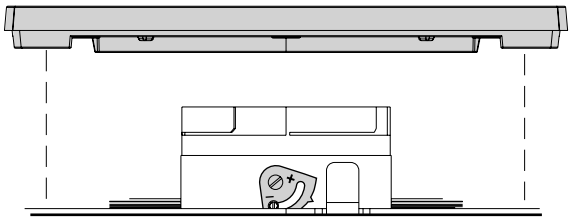

Figure 61. The Exhaust Restrictor is located within the vent adaptor collar.

GF 400 DV Sebago JøtulBurner™ Rates

Natural Gas

32,000 BTU/hr. maximum input
18,000 BTU/hr. minimum input

Propane

32,000 BTU/hr. maximum input
16,000 BTU/hr. minimum input

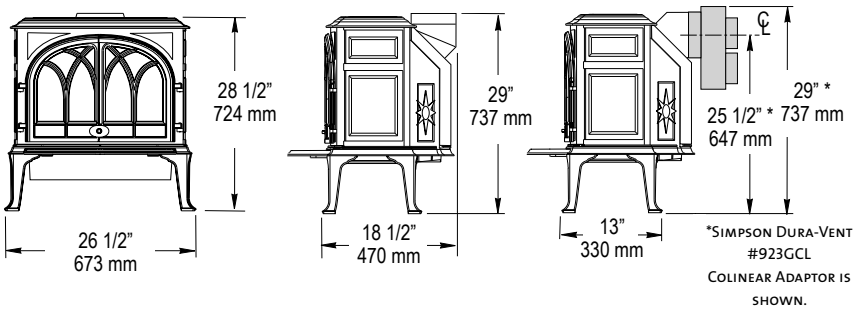

Figure 63.
GF 400 DV Sebago dimensions. Subtract 2 1/4" from height for Short Leg option.

Clearance Requirements

Rear:	2"
Ceiling:	32 1/4"
Corner:	2"
Sides:	3"

Alcove Installation

Max. Alcove Depth: 24"

Min. Alcove Width: 31 3/4"

Min. Ceiling Height: 61"
With Short Legs (6"): 59"

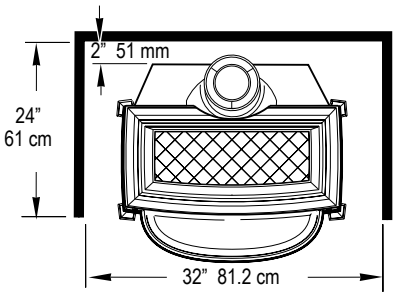

Figure 64. Alcove Installation Clearances.

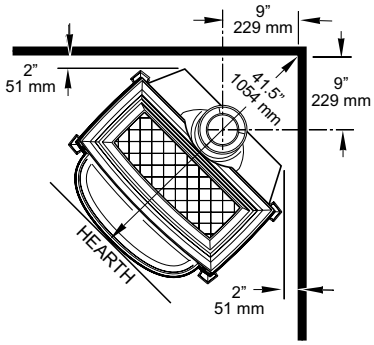

Figure 65. Corner installation Top Exit vent adaptor centerline at minimum clearance.

Hearth Protection

Width: 27"

Depth: 14"

Snorkel Termination

14" Snorkel: Horizontal run must include no more than one 12" section. One 45° elbow is permitted for a corner installation.

36" Snorkel: Max. Horizontal run is 6 ft. (183 cm)

Exhaust Restriction - Do not use exhaust restriction

* Note: It is always preferable to maintain the vertical vent rise inside the house, particularly in cold, windy climates.

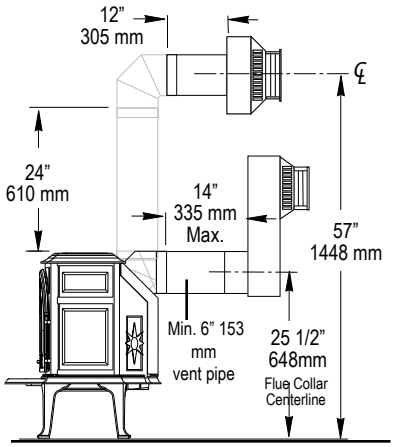

*Figure 66. **

- *Minimum vent for horizontal termination.*
- *14" Maximum horizontal run directly off rear of stove with 14" Snorkel termination.*

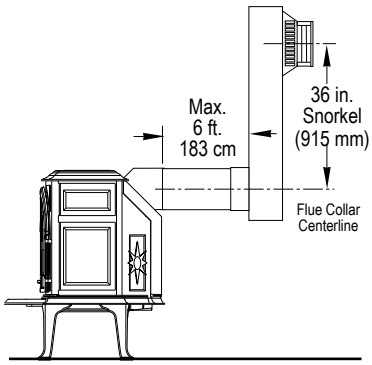

*Figure 67. **
Maximum Horizontal with 36" Snorkel Termination.

A : 41 1/2"

B : 6 1/2 " with Trim Collar

C : 14" Snorkel
Min. 6"
Max. 14"

C : 36" Snorkel
Min. 6"
Max. 6'

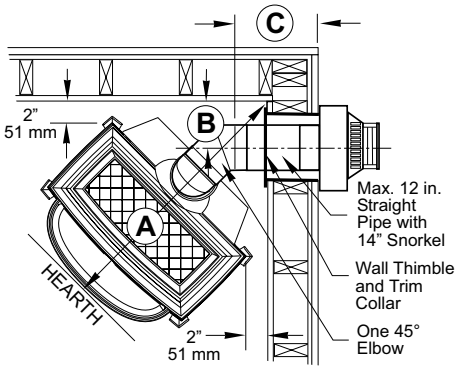

Figure 68.
Corner Installation at min. clearance with Snorkel Termination.

Horizontal and Vertical Vent Termination for Natural Gas

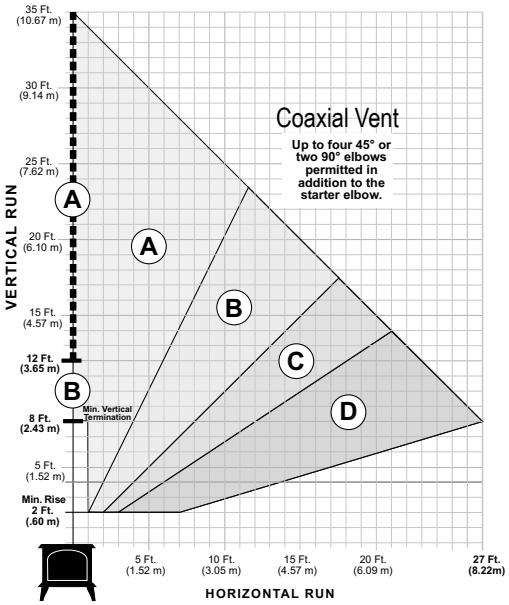

Figure 77.
Coaxial Vent Termination / NG

- All venting must terminate (end) within one of the shaded areas.
- Letter designations define zones for different vent restrictor settings. Consult the installation manual for specific information.

Figure 69.
Colinear Termination / NG

Colinear Vent

- Max. Offset: 2 ft.

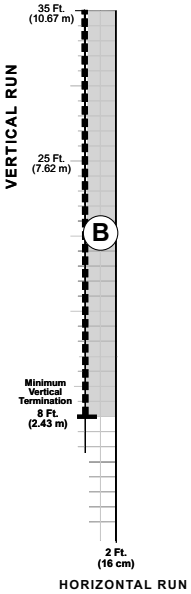

Horizontal and Vertical Vent Termination for Propane

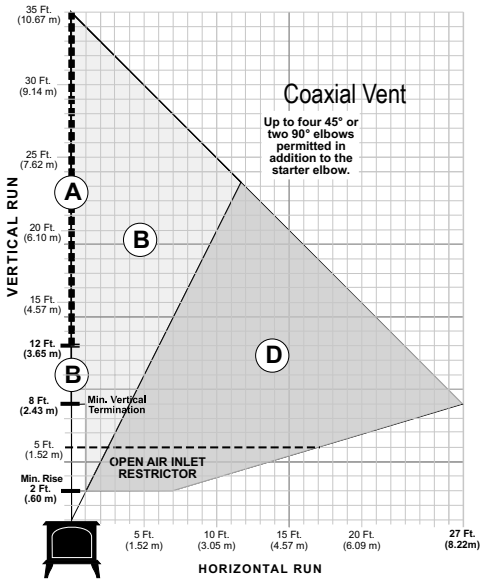

Figure 70.
Coaxial Vent Termination / LP

- All venting must terminate (end) within one of the shaded areas.
- Letter designations define zones for different vent restrictor settings. Consult the installation manual for specific information.

Figure 71.
Colinear Termination / LP.

Colinear Vent

- Venting must terminate (end) within the shaded area.

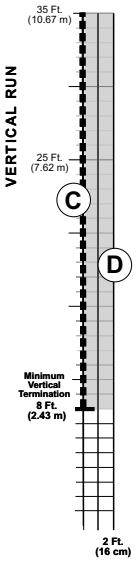

Mantel Clearances

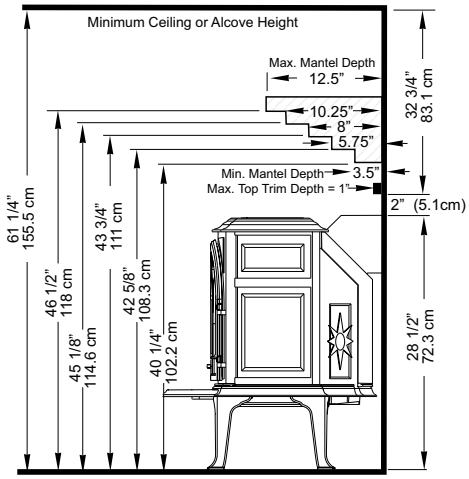

Figure 72.
Mantel and Trim Clearance specifications. Subtract 2 1/4" with Short Legs.

GF 400 DV IPI Sebago JøtulBurner™ Rates

Natural Gas

32,000 BTU/hr. maximum input
17,000 BTU/hr. minimum input

Propane

30,000 BTU/hr. maximum input
14,000 BTU/hr. minimum input

Clearance Requirements

Rear:	2" (51 mm)
Ceiling:	32 1/4" (819 mm)
Corner:	2" (51 mm)
Sides:	3" (76 mm)

Alcove Installation

Max. Alcove Depth: 24"

Min. Alcove Width: 31 3/4"

Min. Ceiling Height: 61"
With Short Legs (6"): 59"

Hearth Protection

Width: 27"

Depth: 14"

Snorkel Termination

14" Snorkel: Horizontal run must include no more than one 12" section. One 45° elbow is permitted for a corner installation.

36" Snorkel: Max. Horizontal run is 6 ft.

Exhaust Restriction - Do not use exhaust restriction

* Note: It is always preferable to maintain the vertical vent rise inside the house, particularly in cold, windy climates.

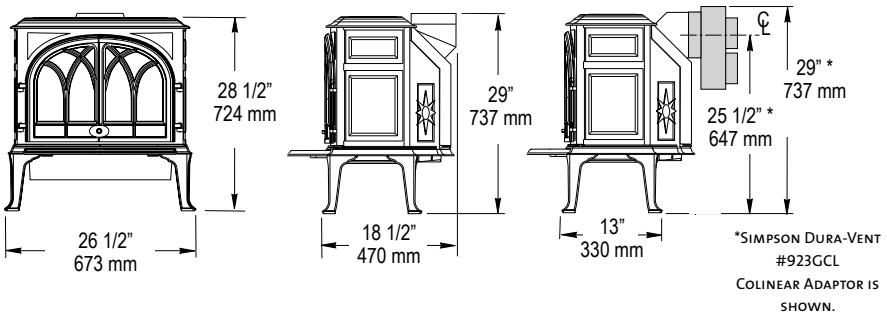

Figure 73.
GF 400 DV Sebago dimensions. Subtract 2 1/4" (70 mm) from height for Short Leg option.

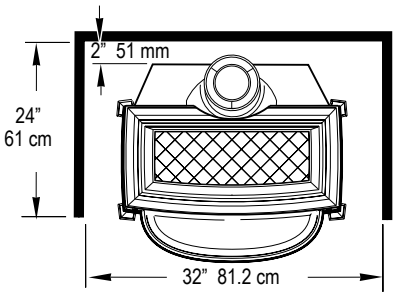

Figure 74. Alcove Installation Clearances.

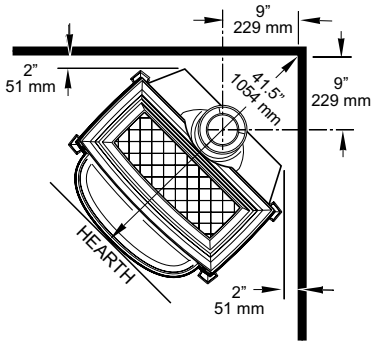

Figure 75. Corner installation Top Exit vent adaptor centerline at minimum clearance.

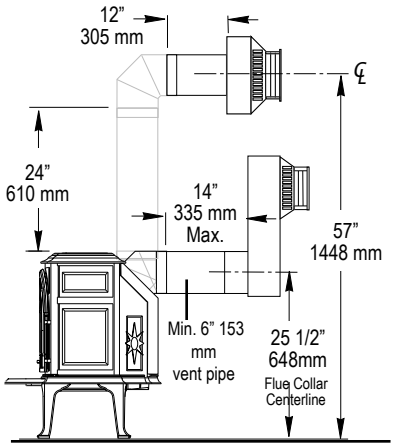

*Figure 76. **

- *Minimum vent for horizontal termination.*
- *14" Maximum horizontal run directly off rear of stove with 14" Snorkel termination.*

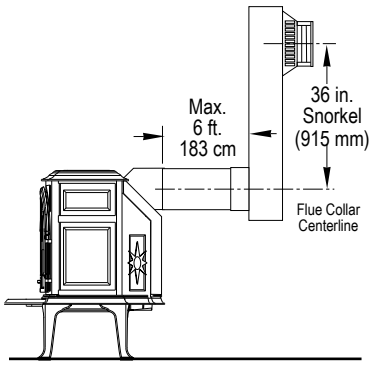

*Figure 77. **
Maximum Horizontal with 36" Snorkel Termination.

A : 41 1/2"

B : 6 1/2" with Trim Collar

C : 14" Snorkel
Min. 6"
Max. 14"

C : 36" Snorkel
Min. 6"
Max. 6'

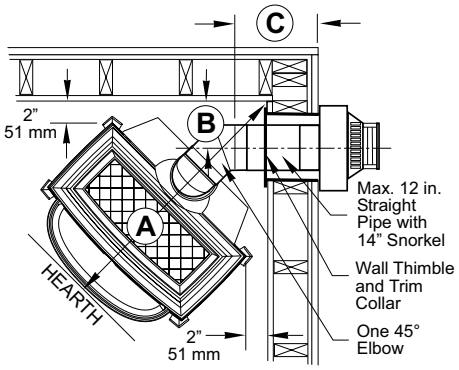

Figure 78.
Corner Installation at min. clearance with Snorkel Termination.

Horizontal and Vertical Vent Termination for Natural Gas

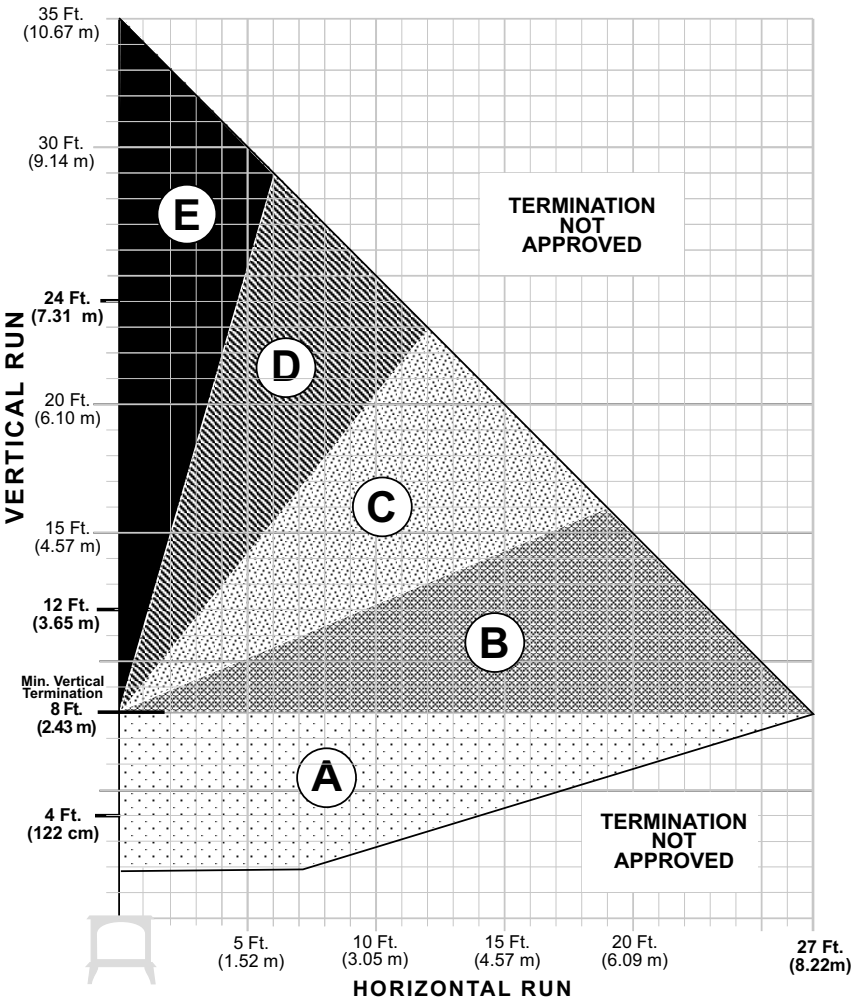

NOTE:
For Horizontal Termination, the run must be reduced by 5 feet for each additional 45° or 90° elbow beyond the starter elbow.

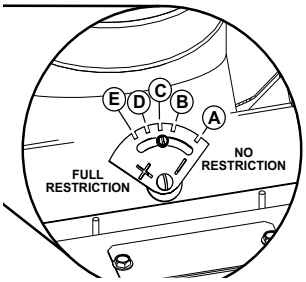

Figure 79. Vent Termination Diagram.

Mantel Clearances

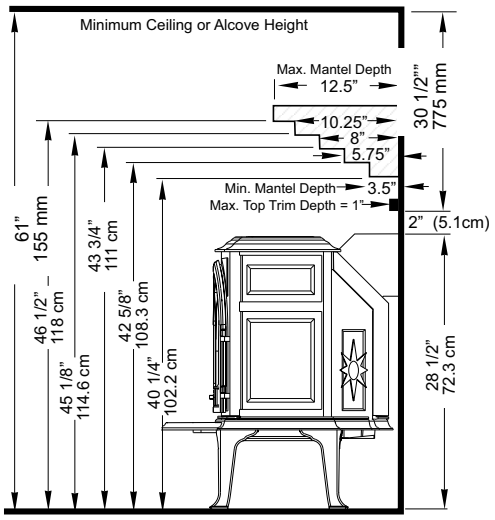

Figure 80. Mantel clearances with standard legs. Reduce stove height and clearance dimensions by 2 1/4 inches with optional Short Legs installed.

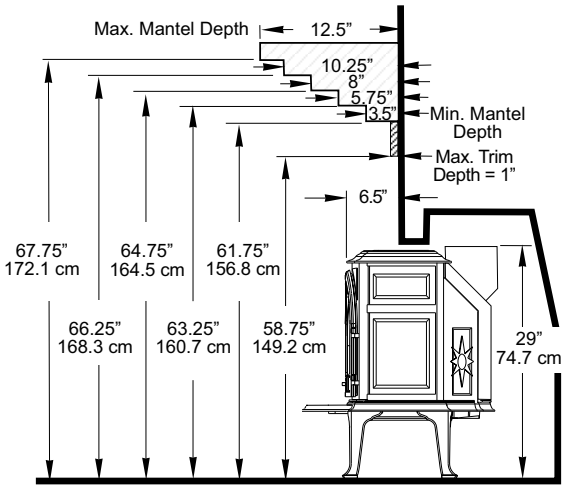

Figure 81. Stove is installed recessed half-way into fireplace. Top plate extends 6.5" forward of the fireplace face.

GF 500 DV Portland Rates

Natural Gas
- 40,000 BTU/hr. maximum input
- 12,800 BTU/hr. minimum input

Propane
- 39,500 BTU/hr. maximum input
- 14,000 BTU/hr. minimum input

GF 500 DV Portland Clearances

Rear:	1 1/2”
Ceiling:	20 1/4”
Corner:	2”
Sides:	2”

Alcove Installation

Maximum Alcove Depth:
24”

Minimum Alcove Width:
32 1/2”

Minimum Ceiling Height from floor:
50 1/4”

With Optional Short Legs:
48”

Hearth Protection

Width: 28 1/2”

Depth: 25”

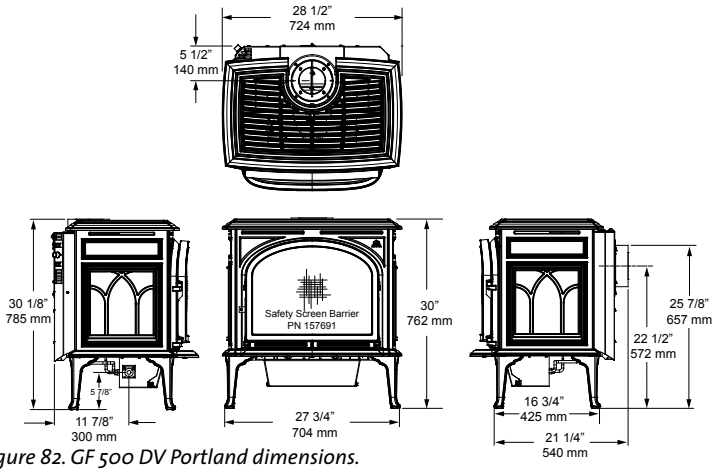

Figure 82. GF 500 DV Portland dimensions.

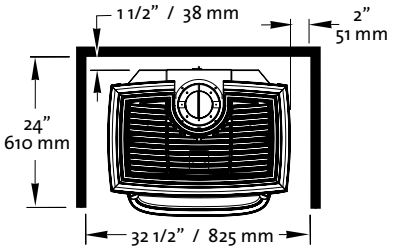

Figure 83. GF 500 DV Alcove dimensions.

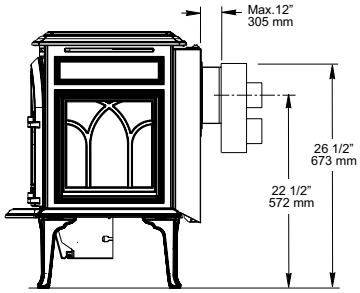

Figure 84. GF 500 DV Rear Exit Centerline with Co-linear Adaptor

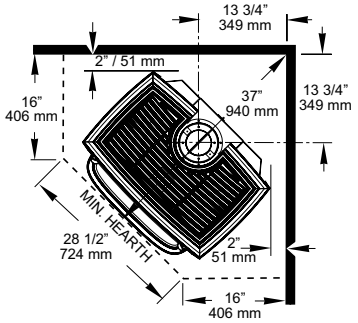

Figure 85.
Corner Installation clearances and minimum hearth pad.

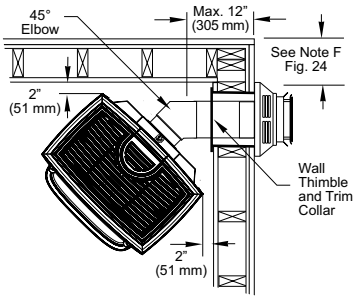

Figure 86.
Corner installation with 36” Snorkel termination. Maximum horizontal run is 12”.

Mantel Clearances

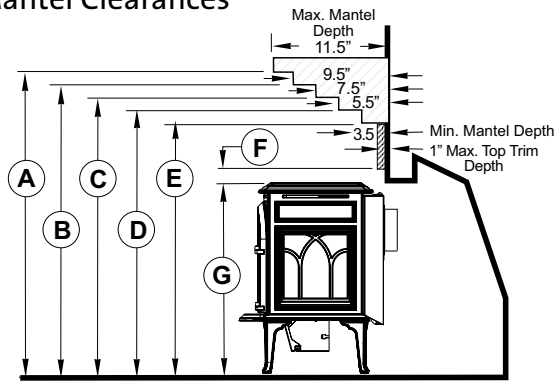

A	40 3/4 in.	E	34 3/4 in.
B	39 1/4 in.	F	3 1/4 in.
C	37 3/4 in.	G	30 in.
D	36 1/4 in.		Short Legs: 27 3/4 in.

Figure 87.
Mantel Clearances - stove flush with fireplace face.

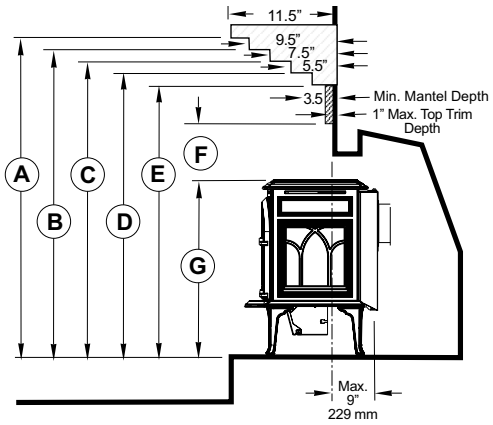

A	54 1/2 in.	E	48 1/2 in.
B	53 in.	F	14 1/4 in.
C	51 1/2 in.	G	30 in.
D	50 in.		Short Legs: 27 3/4 in.

Figure 88.
Mantel Clearances - stove recessed into fireplace, 9” max.

GF 500 DV Horizontal Termination

A horizontal vent run made directly off the rear of the stove must terminate ONLY with a 36" Snorkel Cap.
The maximum horizontal run shall include no more than a single 24" section of pipe. See fig 45.

Minimum vertical rise from the top exit position is a 24" section vent pipe.
See fig. 46.

Maximum wall thickness: 14"

Vertical centerlines are to the stove vent adaptor or elbow, not the vent terminal. When calculating vent terminal centerlines, be sure to include a 1/4" rise for each foot of horizontal vent length.

* Note: It is always preferable to have the vertical vent rise inside the house, particularly in cold, windy climates.

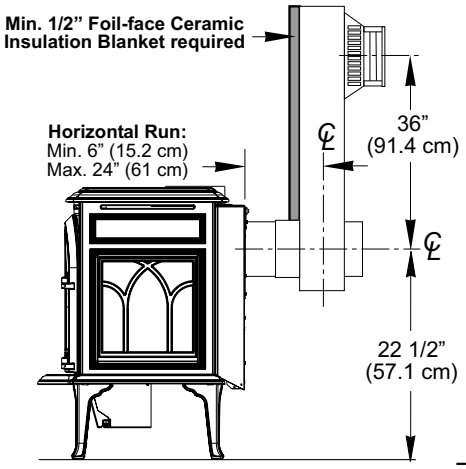

Figure 89.

Min./Max. horizontal and vertical vent run 36" Snorkel termination.

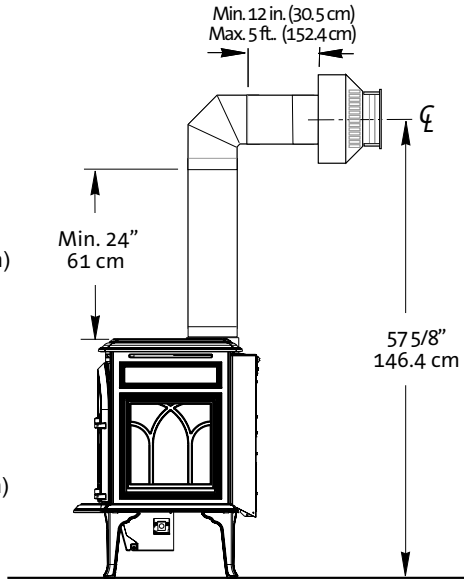

Figure 90. Min./Max. vent required for horizontal termination.

GF 500 DV Vent Termination Diagram

The GF 500 DV Portland can be vertically vented through a roof or ceiling. Follow these guidelines:

All venting must terminate (end) within one of the shaded areas. Exhaust restriction is required for:
- All Co-linear Vent (Flex Pipe
- All coaxial (rigid pipe) venting higher than 7 feet.
- Always maintain proper clearance to combustibles.

See the Owner's Manual for details regarding specific vent restriction settings and installation guidelines.

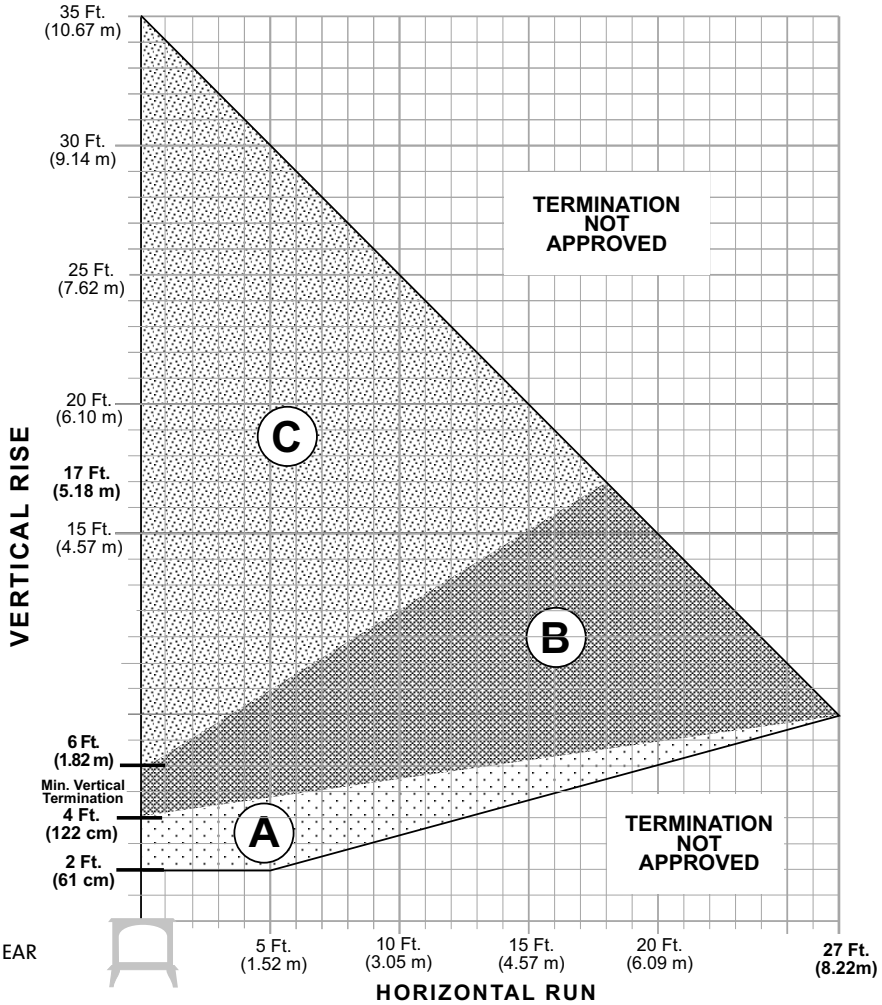

APPLICABLE TO BOTH CO-AXIAL AND CO-LINEAR VENT SYSTEMS

Figure 91. Vent Termination Zone Matrix - NG / LP

GF 500 DV IPI Portland Rates

Natural Gas
- 40,000 BTU/hr. maximum input
- 12,800 BTU/hr. minimum input

Propane
- 39,500 BTU/hr. maximum input
- 14,000 BTU/hr. minimum input

GF 500 DV IPI Portland Clearances

Rear:	1 1/2”
Ceiling:	20 1/4”
Corner:	2”
Sides:	2”

Alcove Installation

Maximum Alcove Depth:
24”

Minimum Alcove Width:
32 1/2”

Minimum Ceiling Height from floor:
50 1/4”

With Optional Short Legs:
48”

Hearth Protection

Width: 28 1/2”

Depth: 25”

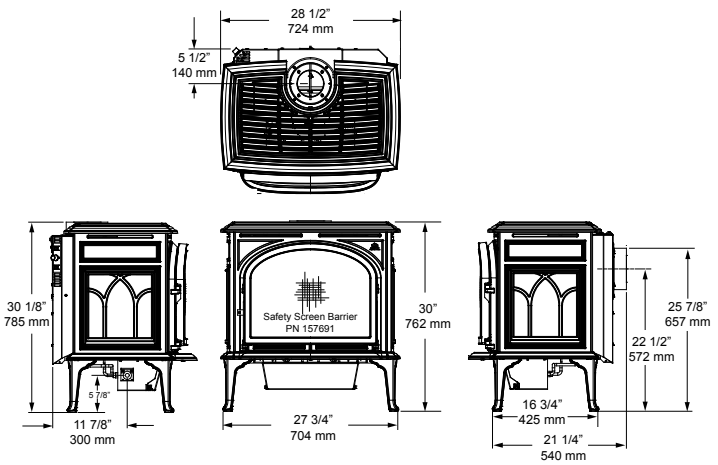

Figure 92. GF 500 DV Portland dimensions.

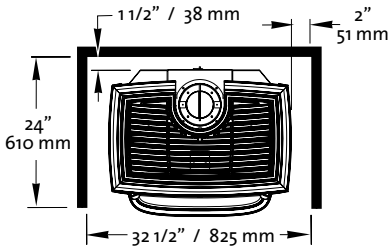

Figure 93. GF 500 DV Alcove dimensions.

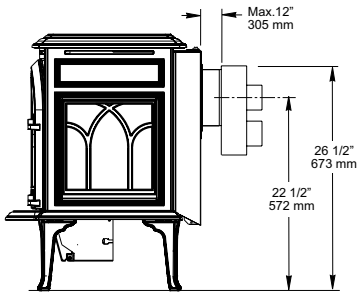

Figure 94. GF 500 DV Rear Exit Centerline with Co-linear Adaptor

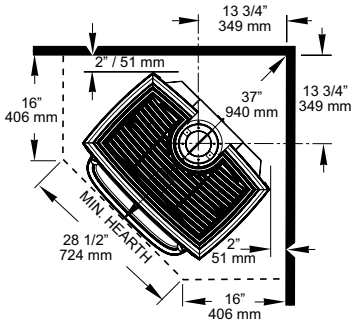

Figure 95.
Corner Installation clearances and minimum hearth pad.

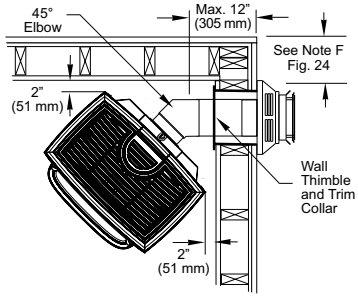

Figure 96.
Corner installation with 36” Snorkel termination. Maximum horizontal run is 12”.

Mantel Clearances

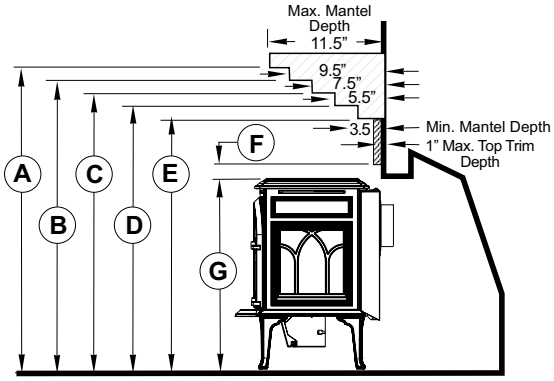

A	40 3/4 in.	E	34 3/4 in.
B	39 1/4 in.	F	3 1/4 in.
C	37 3/4 in.	G	30 in.
D	36 1/4 in.		Short Legs: 27 3/4 in.

Figure 97.
Mantel Clearances - stove flush with fireplace face.

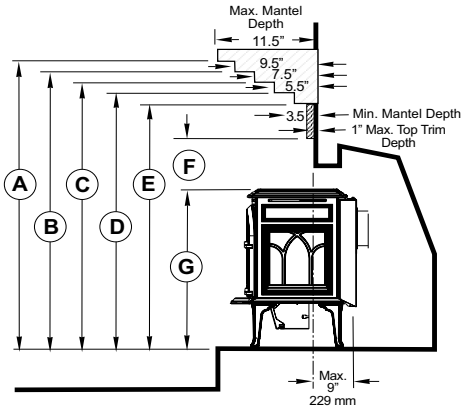

A	54 1/2 in.	E	48 1/2 in.
B	53 in.	F	14 1/4 in.
C	51 1/2 in.	G	30 in.
D	50 in.		Short Legs: 27 3/4 in.

Figure 98.
Mantel Clearances - stove recessed into fireplace, 9” max .

GF 500 DV IPI Horizontal Termination

A horizontal vent run made directly off the rear of the stove must terminate ONLY with a 36" Snorkel Cap.
The maximum horizontal run shall include no more than a single 24" section of pipe. See fig 45.

Minimum vertical rise from the top exit position is a 24" section vent pipe.
See fig. 46.

Maximum wall thickness: 14" (356 mm)

Vertical centerlines are to the stove vent adaptor or elbow, not the vent terminal. When calculating vent terminal centerlines, be sure to include a 1/4" rise for each foot of horizontal vent length.

* Note: It is always preferable to have the vertical vent rise inside the house, particularly in cold, windy climates.

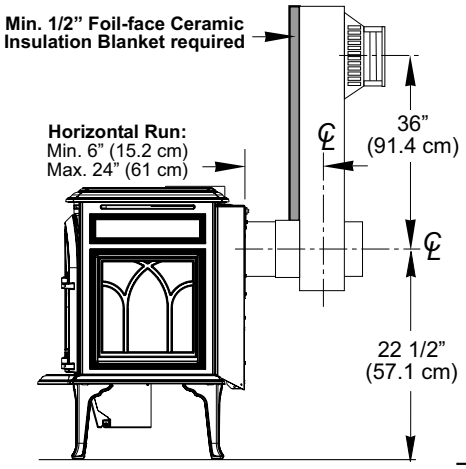

Figure 99. Min./Max. horizontal and vertical vent run 36" Snorkel termination.

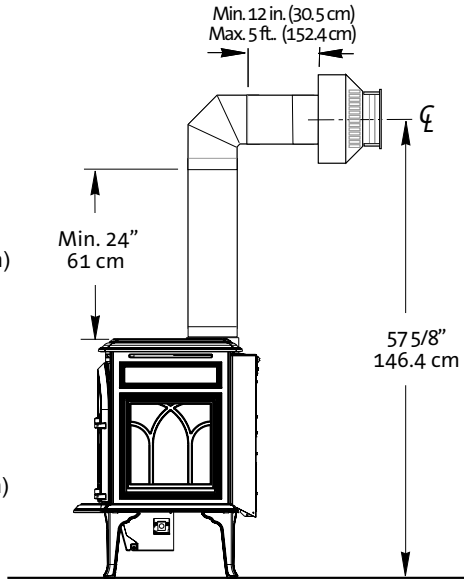

Figure 100. Min./Max. vent required for horizontal termination.

GF 500 DV IPI Vent Termination Diagram

The GF 500 DV IPI Portland can be vertically vented through a roof or ceiling. Follow these guidelines:

All venting must terminate (end) within one of the shaded areas.
Exhaust restriction is required for:
- All Co-linear Vent (Flex Pipe
- All coaxial (rigid pipe) venting higher than 7 feet.
- Always maintain proper clearance to combustibles.

See the Owner's Manual for details regarding specific vent restriction settings and installation guidelines.

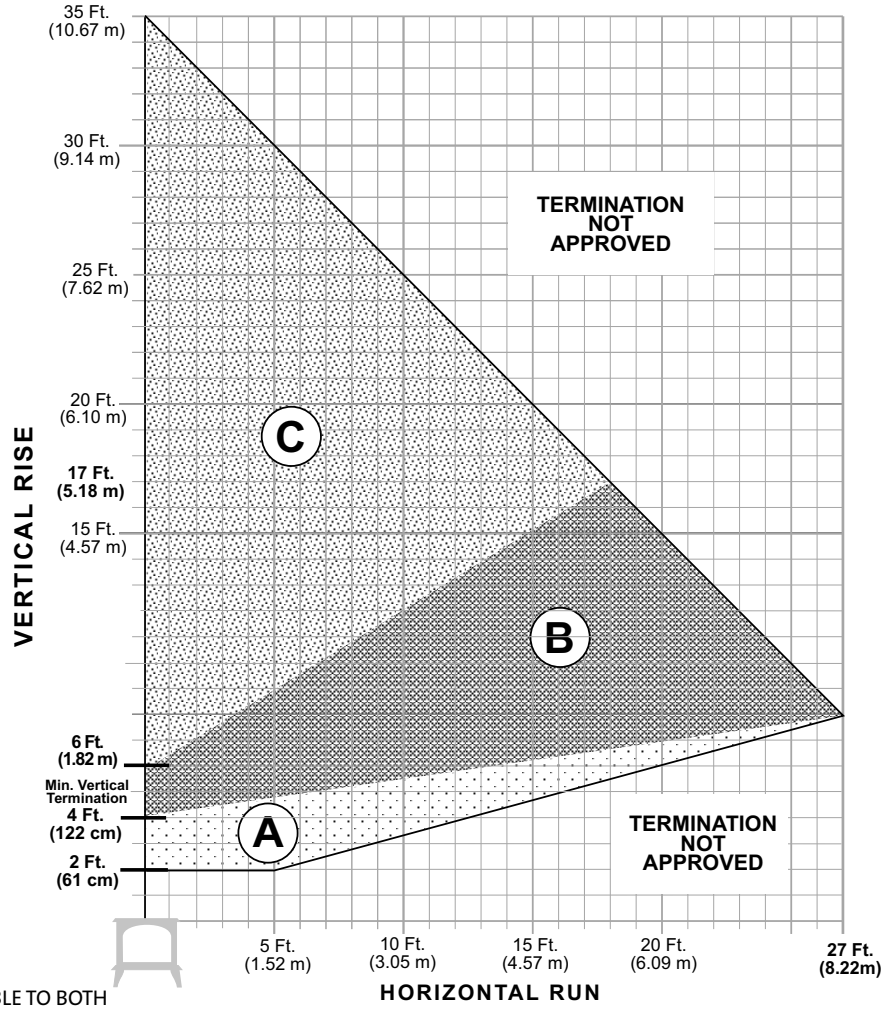

APPLICABLE TO BOTH CO-AXIAL AND CO-LINEAR VENT SYSTEMS

Figure 101. Vent Termination Zone Matrix - NG / LP

GI 450 DV II Katahdin Input Rates

Natural Gas
- 33,000 BTU/hr. maximum input
- 23,750 BTU/hr. minimum input

Propane
- 33,000 BTU/hr. maximum input
- 21,000 BTU/hr. minimum input

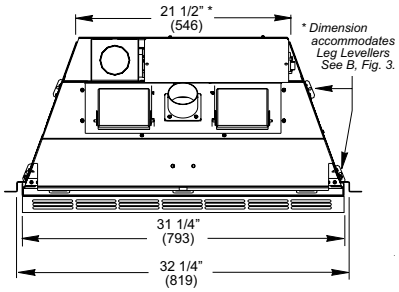

Figure 102.
GI 450 DV Katahdin dimensions.

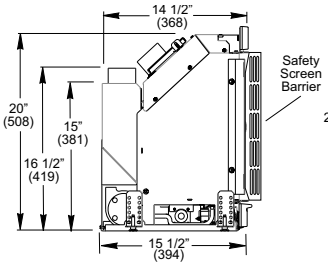

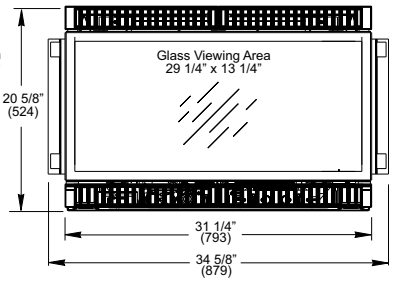

Minimum Fireplace Requirements

The GI 450 DV II Katahdin gas insert has been specifically designed to be installed into a solid fuel burning factory built fireplace or a code approved solid fuel burning masonry fireplace with a tile flue liner. An acceptable fireplace cavity must have the minimum dimensions specified below.

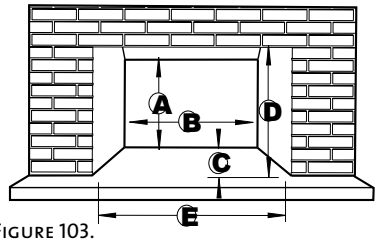

Figure 103.
Minimum fireplace dimensions.

Minimum Fireplace Dimensions

A - Inside Height = 17"

B - Inside Width = 21 1/2" (at 15" of depth) 20 1/2" with removal of leg leveler brackets

C - Inside Depth = 15"

D - Opening Height = 20"

E - Opening Width = 32 1/2"

Maximum Fireplace Opening

Cast iron Surround or Simple Surround:

Will cover a maximum fireplace opening 27 1/2" high x 39" wide.

The overall Standard Surround dimensions are 28" high X 40" wide.

Cast Iron Surround or Simple Surround with 2" Riser Bar:

Will cover a maximum fireplace opening 29 1/2" high x 39" wide

The overall Standard Surround dimensions with the Riser Bar are 30" high X 40" wide.

Optional Wide Surround (must be used with Cast iron Surround):

Will cover a maximum fireplace opening 33 1/2" high X 47" wide.

The overall Wide Surround dimensions are 34" high X 47 3/4" wide when installed with the included Side Panel (leg) extensions

NOTE: If the Wide Surround is used without the Riser Bar, 2" of material must be removed from the surround legs. See Product Manual for instruction.

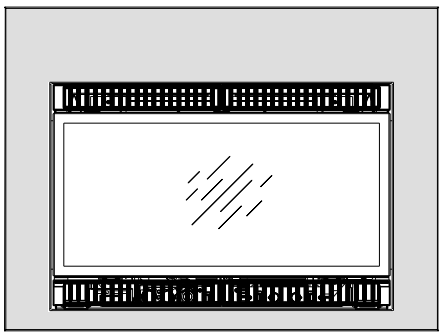

Figure 104. Simple Surround Assembly

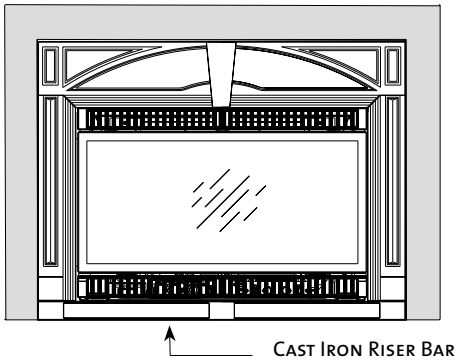

Figure 105. Wide Surround Assembly

Clearance Requirements

The following clearances and hearth requirements are the minimum requirements for installing the GI 450 DV II Katahdin into a masonry or prefabricated fireplace. Measure clearances from the center and finished floor of the fireplace opening. See figure 106.

A: Hearth Protection Width
- Unit flush or raised: 8" from fireplace opening

B: Hearth Protection Depth
- Unit flush with hearth: 16"
- Unit raised min. 6" off floor: 12"

C: Side Trim Clearance
- Up to 6" thick, from fireplace center line: 20 1/2"

D: Side Room Wall Clearance
- From the fireplace center line: 24 1/2"

E: Top Trim Clearance from hearth: 41 "

F: Mantel Clearance from hearth: See fig. 107

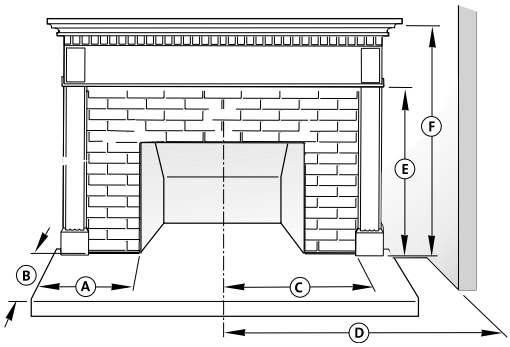

Figure 106. Clearance requirements

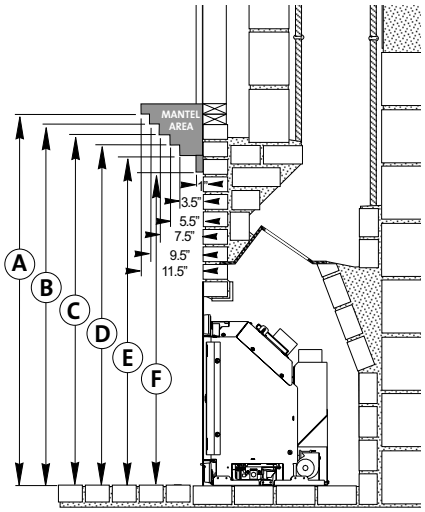

Figure 107. Mantel, Trim and Wall Clearances.

Mantel and Top Trim Clearances

Measure clearances from the finished floor of the fireplace opening.

A:	48 1/2"
B:	47"
C:	45 1/2"
D:	44"
E:	42 1/2"
F:	41"

NOTE: THESE CLEARANCES MAY BE REDUCED BY 2" IF THE OPTIONAL RISER BAR IS NOT USED.

Figure 108. Venting through masonry fireplace.

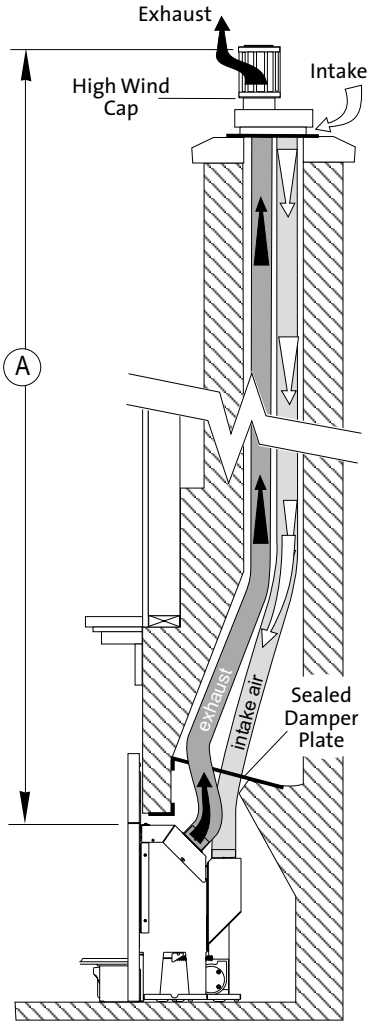

A: Vent Height - measured from the top of the insert to the top of the termination cap.
Min. 10 ft.
Max. 35 ft.

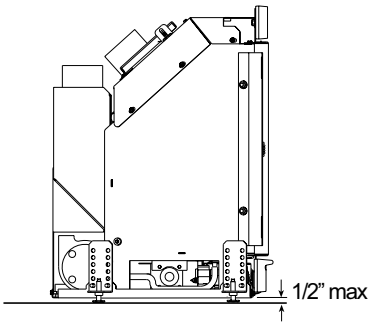

Figure 109. The leveling bolts should not be extended further than 1/2".

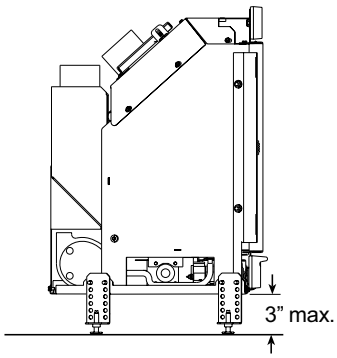

Figure 110. The bolt mounting brackets may be extended up to 2 1/2". With maximum extension of both bolts and brackets, the firebox may be raised a total of 3".

Note: If raising the unit more than 2 inches, add 1 inch to the baseline clearances specified above.

Vent Guidelines

- Minimum vent height above the roof or adjacent walls is specified by building codes. See figure 72.
- Use only 3" diameter listed flexible gas liner. One liner is attached to the Exhaust Outlet on the back of the unit and will carry the exhaust gases through the chimney to the outside of the house. The other 3" liner will be attached to the Air Intake Collar on the back of the unit to provide fresh air for combustion.
- Any unused masonry or prefabricated chimney may be used as a passageway for venting as specified by local codes or NFPA 54, latest edition.
- The remaining space around the liner in a masonry or zero-clearance flue CANNOT be used to vent any other appliance.
- Flexible liner components may not be exposed in any living space.
- Horizontal runs are not permitted anywhere in the venting system.
- Never modify any venting component, or use any damaged venting product.
- This fireplace must be vented directly to the outside of the building. Do not vent through a flue used by a solid fuel burning or gas burning appliance.

CANADA REQUIREMENT

Both the Intake and the Exhaust liners must extend the full length of the chimney and be securely connected to both the unit and the termination kit.

GI 535 DV IPI New Harbor Input Rates

Natural Gas
- 32,000 BTU/hr. maximum input
- 11,500 BTU/hr. minimum input

Propane
- 31,500 BTU/hr. maximum input
- 11,000 BTU/hr. minimum input

The GI 535 DV IPI New Harbor Gas Fireplace is intended for installation within a totally enclosed structure. The fireplace must be connected to a direct vent system and termination cap outside the building. Do not vent into another room or inside any part of a building. Under no circumstances may the flow of combustion or ventilation air be obstructed.

Fireplace Requirements

This appliance is approved for installation into a solid fuel-burning, factory-built fireplace, or a code-approved, solid fuel-burning masonry fireplace.

Do not modify or alter the construction of the gas insert or any of its components to enable it to fit into a fireplace. Any modification of the insert will void the warranty, certifications and approvals of the unit and could be dangerous.

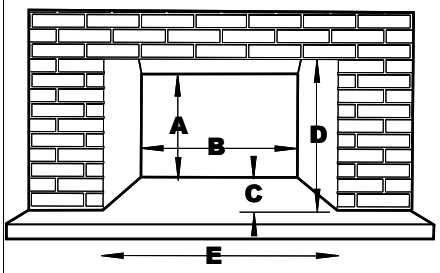

Figure 111. Fireplace dimensions

Minimum Fireplace Dimensions

A - Inside Height = 20”

B - Inside Width = 21”

(at 16 1/2” of depth)

C - Inside Depth = 15 3/8”

D - Opening Height = 20”

E - Opening Width = 30”

Figure 112. Cabinet Dimensions.

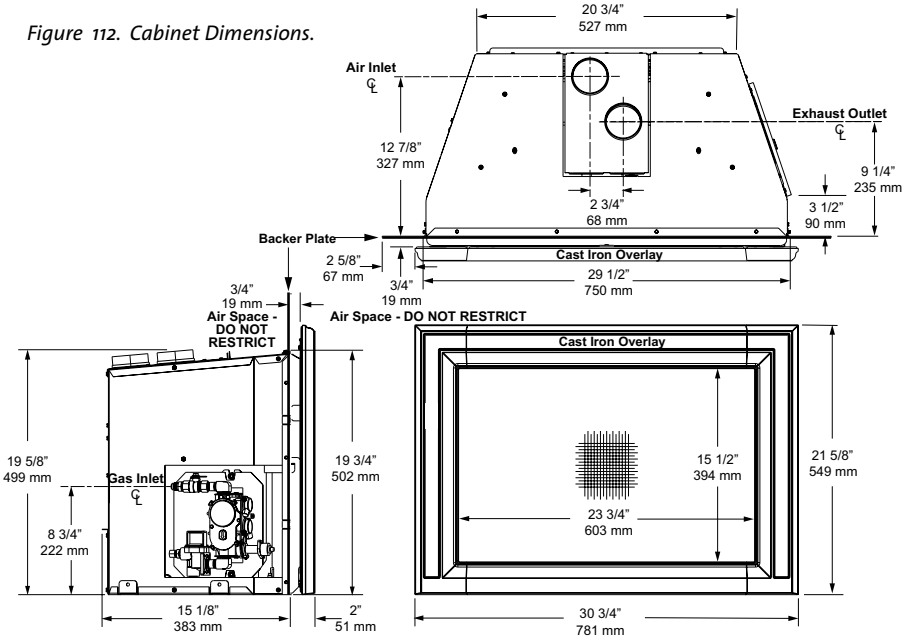

Maximum Fireplace Opening

Standard Backer Plate:

Will cover a maximum fireplace opening 21 3/8” high x 30 1/2” wide.

The overall Standard Surround dimensions are 24 1/2” high X 36” wide.

Backer Plate Options:

All Backer Plates include Hanger Brackets for attaching the Cast Iron or Steel Surround Overlays

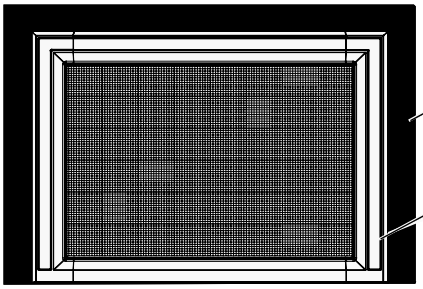

Three-sided Backer Plates:

- 36” W x 24 1/4”H: #157889
- 38”W x 28”H: #157890
- 40” W x 30”H : #157891

Three-sided Trimmable Backer Plate:

- 46” W x 34” H : #157892

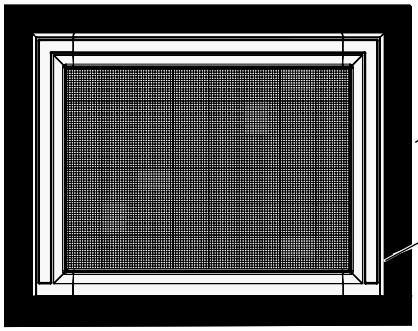

Four-sided Trimmable Backer Plate

- 46” W x 34” H : #157893

Mantel and Ceiling Clearances

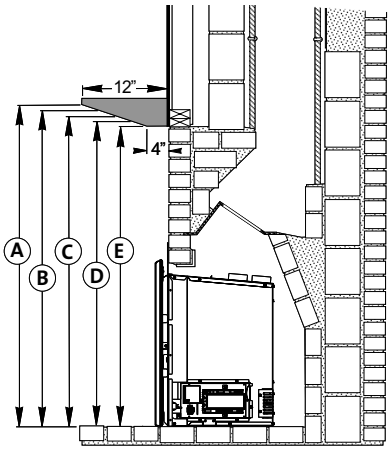

Figure 113. Mantel and ceiling clearances

Measure clearances from the finished floor of the fireplace opening. See fig. 111

	Mantel Projection	Clearance from Hearth
A:	12"	39 1/4"
B:	10"	38 9/16"
C:	8"	37 7/8"
D:	6"	37 3/16"
E:	4"	36 1/2"

Minimum Ceiling Height from fireplace floor:
55 1/2"

Hearth Protection

Hearth protection in front of the GI 535 DV IPI must be composed of masonry material extending at least 3 1/8" to each side of the fireplace opening and 12" forward from the fireplace facing material.

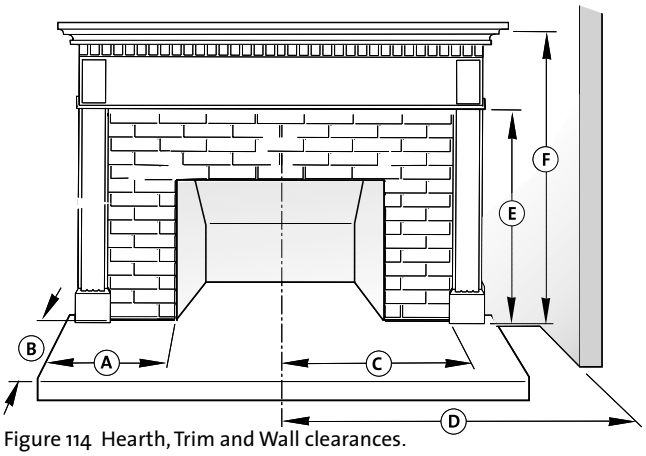

Figure 114 Hearth, Trim and Wall clearances.

A: Hearth Protection Width:
- Unit flush: Min. 3 1/8" from fireplace opening
- Unit raised minimum 6" off floor: 0"

B: Hearth Protection Depth:
- Unit flush with hearth: 12"
- Unit raised minimum 6" off floor: 0"

C: Side Trim Clearance:
- Up to 6" depth, from fireplace center line: 17 7/8"

D: Side Room Wall Clearance:
- From the fireplace center line: 20 3/8"

E: Top Trim Clearance from hearth: 36 1/2"

F: Mantel Clearance from hearth: See fig.113

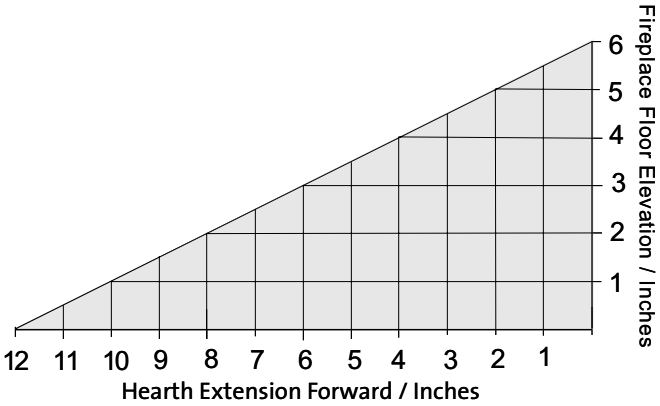

Figure 115. Hearth reduction slope.

NOTE - Raised Hearth: Forward hearth protection may be reduced by two inches for every inch of fireplace floor elevation. Fig. 115.

GI 545 DV Winter Harbor Input Rates

Natural Gas
30,000 BTU/hr. maximum input
16.000 BTU/hr. minimum input

Propane
28,000 BTU/hr. maximum input
13,500 BTU/hr. minimum input

The GI 545 DV Winter Harbor Gas Fireplace is intended for installation within a totally enclosed structure. The fireplace must be connected to a direct vent system and termination cap outside the building. Do not vent into another room or inside any part of a building. Under no circumstances may the flow of combustion or ventilation air be obstructed.

Fireplace Requirements

This appliance is approved for installation into a solid fuel-burning, factory-built fireplace, or a code-approved, solid fuel-burning masonry fireplace.

Do not modify or alter the construction of the gas insert or any of its components to enable it to fit into a fireplace. Any modification of the insert will void the warranty, certifications and approvals of the unit and could be dangerous.

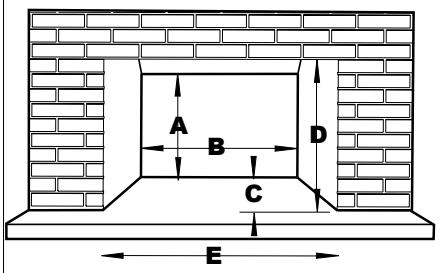

Figure 116. Fireplace dimensions

Minimum Fireplace Dimensions

A - Inside Height = 20”
B - Inside Width = 21”
(at 14 1/2” of depth)
C - Inside Depth = 15”
D - Opening Height = 20”
E - Opening Width = 30”

Figure 117. Cabinet Dimensions.

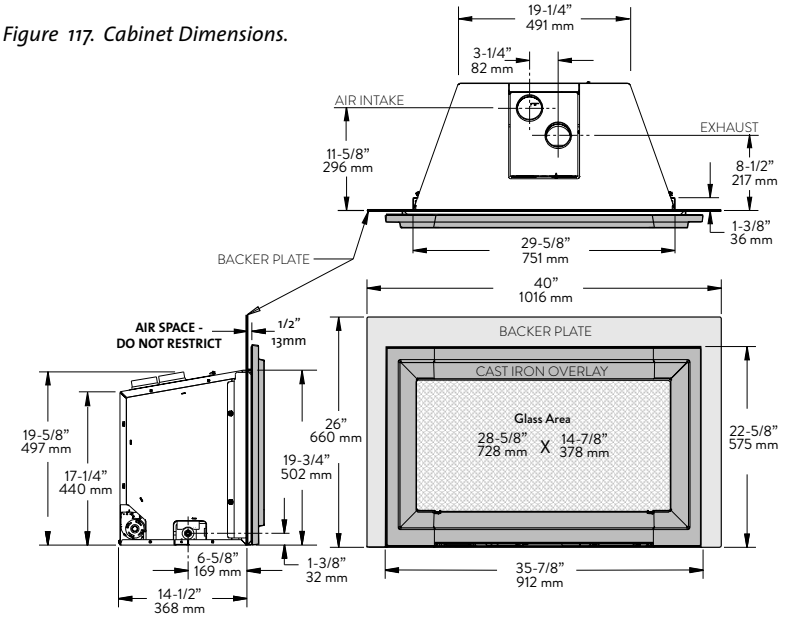

Maximum Fireplace Opening

Standard Backer Plate:

Will cover a maximum fireplace opening 21 3/8” high x 30 1/2” wide.

The overall Standard Surround dimensions are 24 1/2” high X 36” wide.

Backer Plate Options:

All Backer Plates include Hanger Brackets for attaching the Cast Iron or Steel Surround Overlays

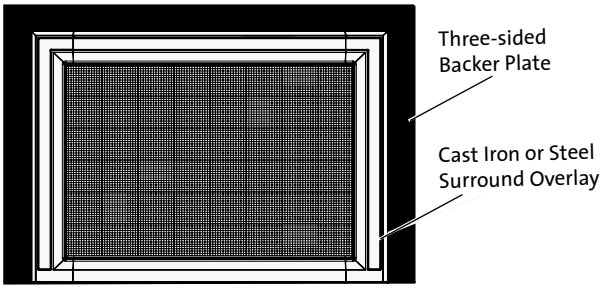

Three-sided Overlay Backer Plate, Matte Black Paint
- Overlay Backer Frame, 40”W x 26”H .....#158106
- Overlay Backer Frame, 41”W x 28”H .....#158107
- Overlay Backer Frame, 42”W x 30”H .....#158108

Three-sided Trimmable Overlay Backer Plate
- 46”Wx 34”H (116.8 x 86.4 cm).....#158109

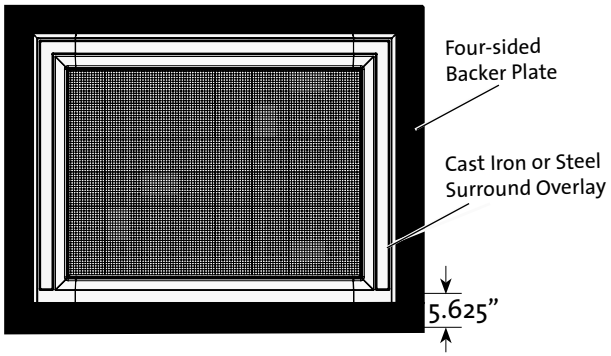

Four-sided Trimmable Backer Plate, Matte Black Paint
- 46” W x 34” H (116.8 x 86.4 cm) ..... #158110

Mantel and Ceiling Clearances

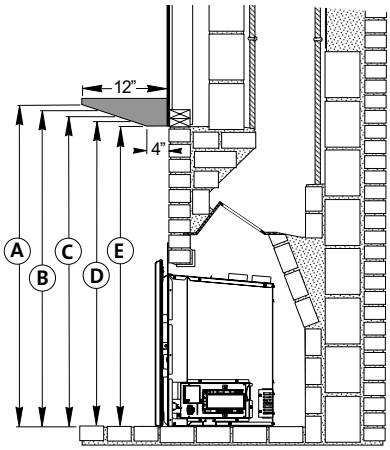

Figure 118. Mantel and ceiling clearances.

Measure clearances from the finished floor of the fireplace opening. See fig. 116.

	Mantel Projection	Clearance from Hearth
A:	12"	39 3/4"
B:	10"	38 1/8"
C:	8"	38 1/2"
D:	6"	37 7/8"
E:	4"	37 1/4"

Minimum Ceiling Height from fireplace floor:
96"

Hearth Protection

Hearth protection in front of the GI 545 DV must be composed of masonry material extending at least 3 1/8" to each side of the fireplace opening and 12" forward from the fireplace facing material.

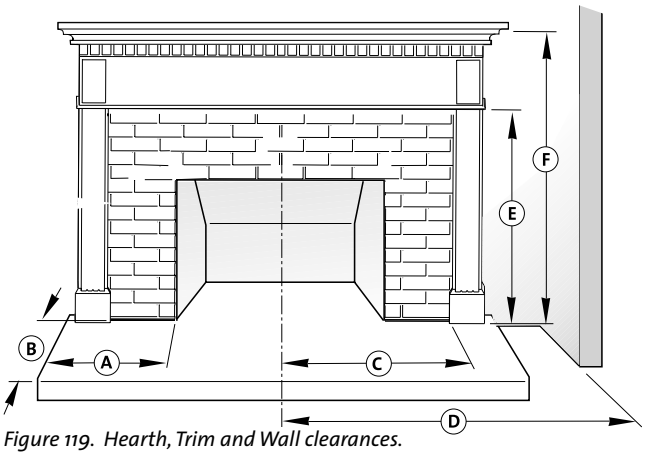

Figure 119. Hearth, Trim and Wall clearances.

A: Hearth Protection Width: from fireplace opening
- Unit flush: Min. 3 1/8"
- Unit raised minimum 6" off floor: 0"

B: Hearth Protection Depth:
- Unit flush with hearth: 12"
- Unit raised minimum 6" off floor: 0"

C: Side Trim Clearance:
- Up to 6" (15.2c m) depth, from fireplace center line: 20.75"

D: Side Room Wall Clearance:
- From the fireplace center line: 27"

E: Top Trim Clearance from hearth: 37 1/4"

F: Mantel Clearance from hearth: See fig. 118.

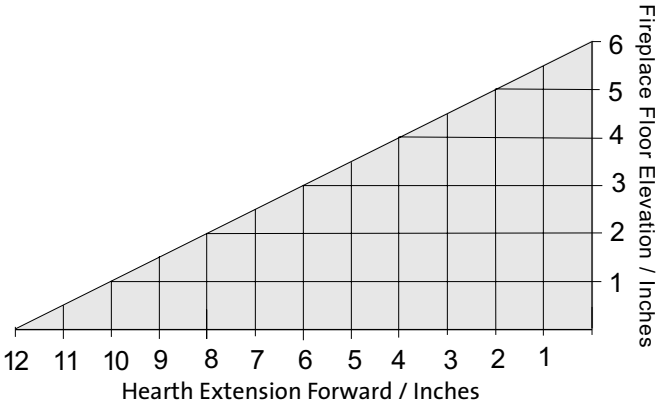

Figure 120. Hearth reduction slope.

NOTE - Raised Hearth: Forward hearth protection may be reduced by two inches for every inch of fireplace floor elevation. Fig. 120

GI 635 DV Newcastle Input Rates

Natural Gas
- 40,000 BTU/hr. maximum input
- 10.000 BTU/hr. minimum input

Propane
- 40,000 BTU/hr. maximum input
- 8,700 BTU/hr. minimum input

The GI 635 DV IPI Newcastle Gas Fireplace is intended for installation within a totally enclosed structure. The fireplace must be connected to a direct vent system and termination cap outside the building. Do not vent into another room or inside any part of a building. Under no circumstances may the flow of combustion or ventilation air be obstructed.

Fireplace Requirements

This appliance is approved for installation into a solid fuel-burning, factory-built fireplace, or a code-approved, solid fuel-burning masonry fireplace.

Do not modify or alter the construction of the gas insert or any of its components to enable it to fit into a fireplace. Any modification of the insert will void the warranty, certifications and approvals of the unit and could be dangerous.

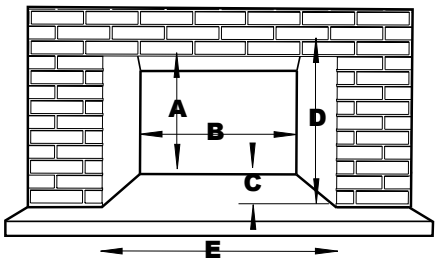

Figure 121. Minimum fireplace dimensions.

Minimum Fireplace Dimensions

A - Inside Height = 24”

B - Inside Width = 23 1/2” (at 16 1/2” of depth)

C - Inside Depth = 16 1/2”

D - Opening Height = 24”

E - Opening Width = 33 3/4”

Figure 122 Cabinet Dimensions.

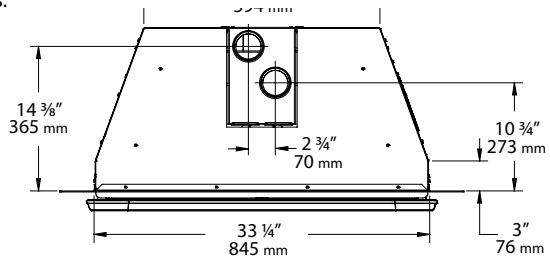

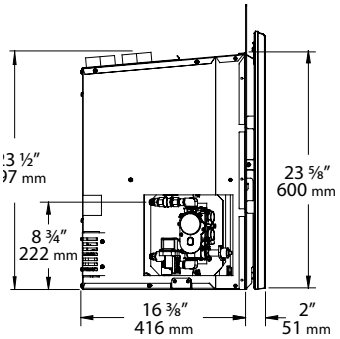

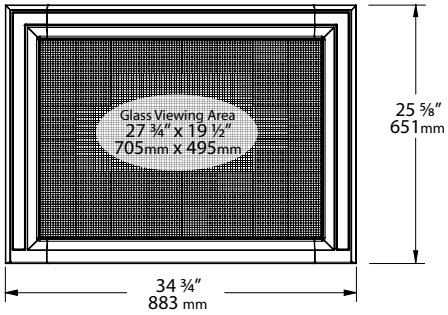

Maximum Fireplace Opening

Standard Backer Plate:

Will cover a maximum fireplace opening 21 3/8” high x 30 1/2” wide.

The overall Standard Surround dimensions are 24 1/2” high X 36” wide.

Backer Plate Options:

All Backer Plates include Hanger Brackets for attaching the Cast Iron or Steel Surround Overlay.

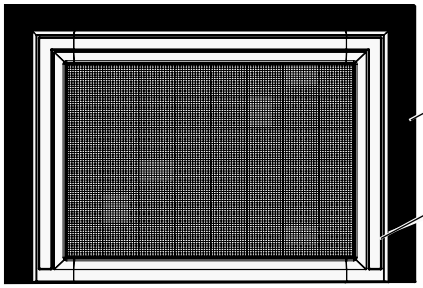

Three-sided Backer Plate
- 40” W x 28 1/4”H #157799
- 42”W x 31”H #157800
- 46” W x 34”H #157801

Three-sided Trimmable Backer Plate
- 47 3/4”W x 38”H #157826

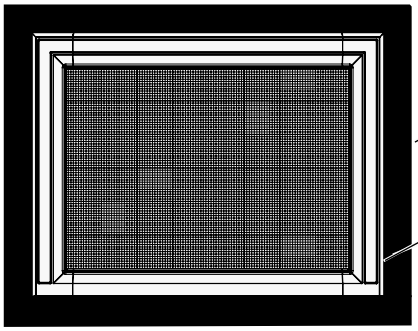

Four-sided Timmable Backer Plate
- 47 3/4” W x 38 3/8”H #157827

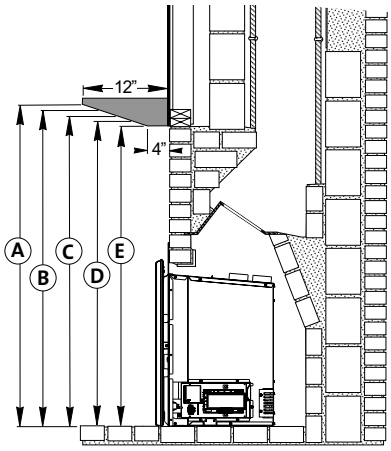

Figure 123. Mantel and ceiling clearances

Mantel and Ceiling Clearances

Measure clearances from the finished floor of the fireplace opening. See fig. 123.

	Floor to Mantel	Mantel Projection
A:	41"	12"
B:	40"	10"
C:	39"	8"
D:	38"	6"
E:	37"	4"

Minimum Ceiling Height from fireplace floor: 55 1/4"

Hearth Protection

Hearth protection in front of the GI 535 DV IPI must be composed of masonry material extending at least 3 1/8" to each side of the fireplace opening and 12" forward from the fireplace facing material.

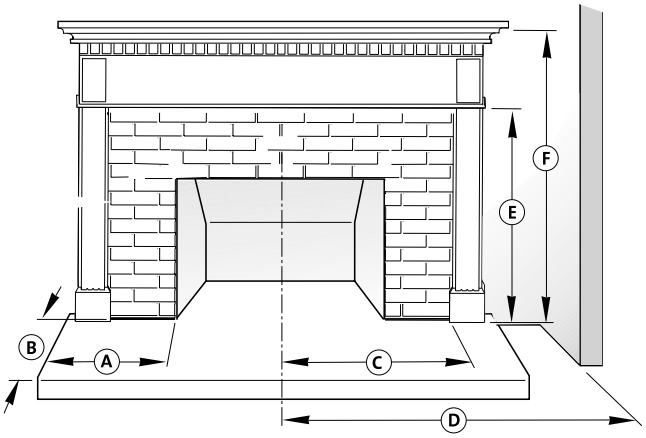

Figure 124. Mantel and ceiling dimensions

A: Hearth Protection Width:
- Unit flush: Min. 4 1/8" from fireplace opening
- Unit raised minimum 6" off floor: 0"

B: Hearth Protection Depth:
- Unit flush with hearth: 12"
- Unit raised minimum 6" off floor: 0"

C: Side Trim Clearance:
- Up to 6" depth, from fireplace center line: 21"

D: Side Room Wall Clearance:
- From the fireplace center line: 24"

E: Top Trim Clearance from hearth: 37"

F: Mantel Clearance from hearth: See fig. 124

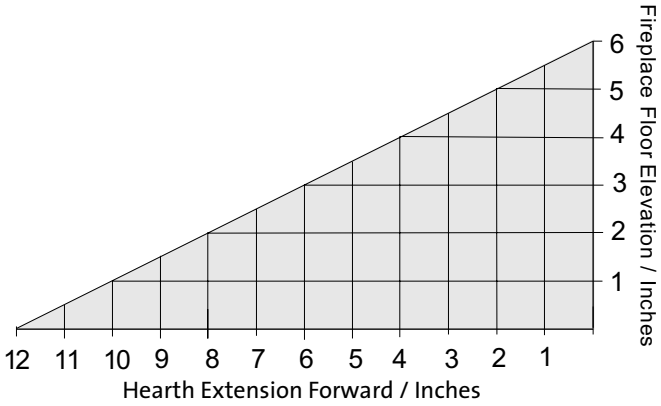

Figure 125. Hearth reduction slope.

NOTE - Raised Hearth: Forward hearth protection may be reduced by two inches for every inch of fireplace floor elevation. Fig. 125

Input Rates:

Natural Gas

38,000 BTU/hr. Maximum Input Rate
21,000 BTU/hr. Minimum Input Rate

Propane

36,500 BTU/hr. Maximum Input Rate
20,000 BTU/hr. Minimum Input

The GI 645 DV Astrid Gas Fireplace is intended for installation within a totally enclosed structure. The fireplace must be connected to a direct vent system and termination cap outside the building. Do not vent into another room or inside any part of a building. Under no circumstances may the flow of combustion or ventilation air be obstructed.

Fireplace Requirements

This appliance is approved for installation into a solid fuel-burning, factory-built fireplace, or a code-approved, solid fuel-burning masonry fireplace.

Do not modify or alter the construction of the gas insert or any of its components to enable it to fit into a fireplace. Any modification of the insert will void the warranty, certifications and approvals of the unit and could be dangerous.

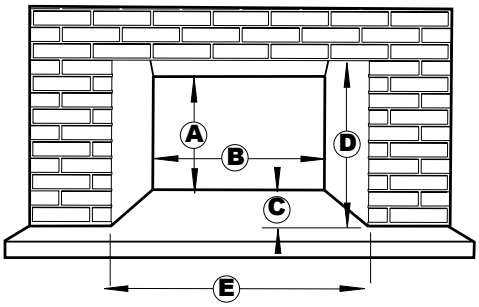

Figure 126. Minimum fireplace dimensions.

Minimum Fireplace Dimensions

A - Inside Height =	19”
B - Inside Width =	23 3/4”
C - Inside Depth =	16 1/2”
D - Opening Height =	24”
E - Opening Width =	33 3/4”

Figure 127 Cabinet Dimensions.

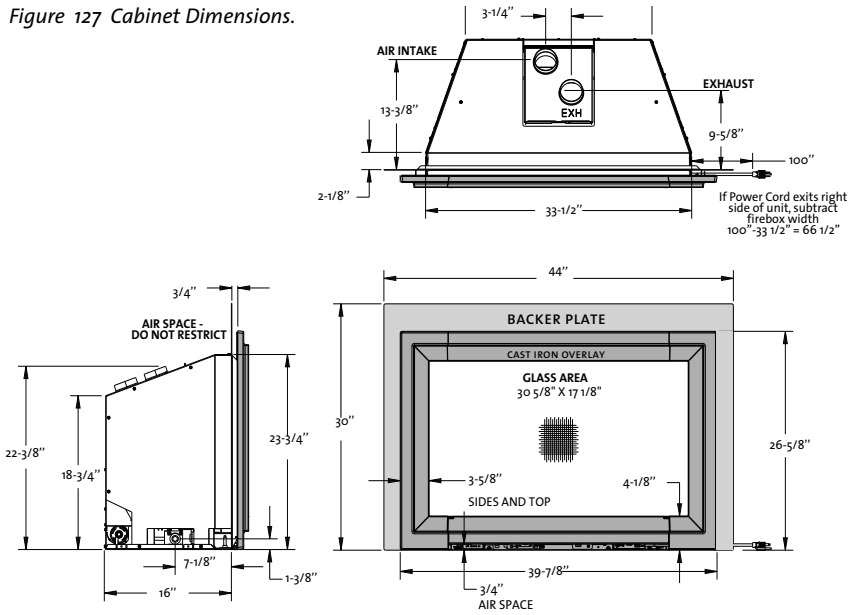

Maximum Fireplace Opening

with Cast Iron Overlay:

Will cover a maximum fireplace opening
26 3/8” high x 35 5/8” wide resulting in a 1/4” face overlap.

Backer Plate Options

All Backer Plates include Hanger Brackets for attaching the Cast Iron or Steel Surround Overlays.

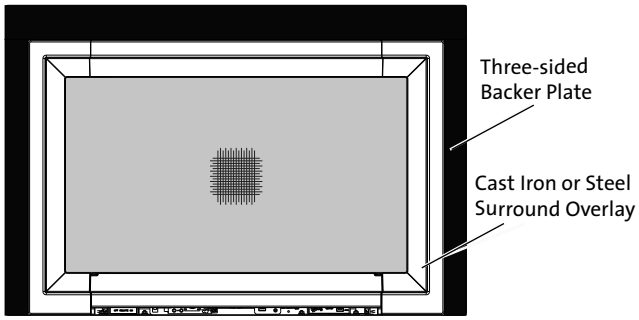

Three-sided Overlay Backer Plate, Matte Black Powder Coat

- Overlay Backer Frame, 44” x 30” 158181
- Overlay Backer Frame, 45” x 32” 158182
- Overlay Backer Frame, 46” x 34” 158183

Three-sided Trimmable Overlay Backer Plate, Matte Black Paint

- Trimmable Backer Plate, 3 Sided, 47-3/4” x 38” 158184

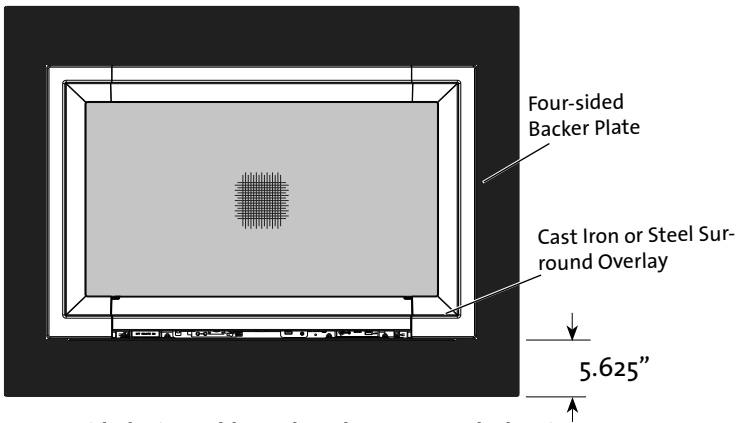

Four-sided Trimmable Backer Plate, Matte Black Paint

- Trimmable Backer Plate, 4 Sided, 47-3/4” x 38” 158185

NOTE - Raised Hearth: Forward hearth protection may be reduced by two inches for every inch of fireplace floor elevation. Fig. 128

Fig. 128 Hearth reduction slope.

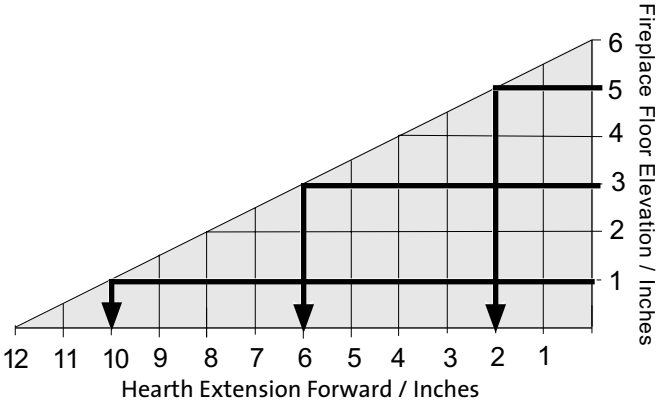

Mantel without Shield and Ceiling Clearances

Measure clearances from the finished floor of the fireplace opening. See fig. 129

	Mantel Projection	Clearance from Hearth
A:	12”	48 1/8”
B:	10”	47 7/8”
C:	8”	47 1/4”
D:	6”	46 5/8”
E:*	4”	46”

**Also to Top Trim*

Minimum Ceiling Height from Hearth Surface:
64 3/4”

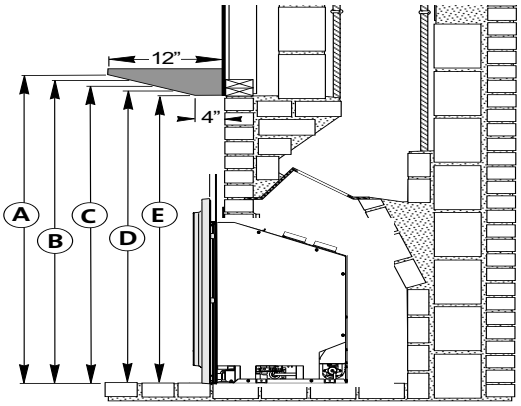

Figure 129. Mantel and ceiling dimensions

Mantel with Shield (#158201) and Ceiling Clearances

Measure clearances from the finished floor of the fireplace opening. See fig. 130

	Mantel Projection	Clearance from Hearth
A:	12”	42 1/2”
B:	10”	41 1/2”
C:	8”	40 1/2”
D:	6”	39 1/2”
E:*	4”	38 1/2”

**Also to Top Trim*

Minimum Ceiling Height from Hearth Surface:
64 3/4”

**Mantle Heat Shield 158201 mounts to backer plates*

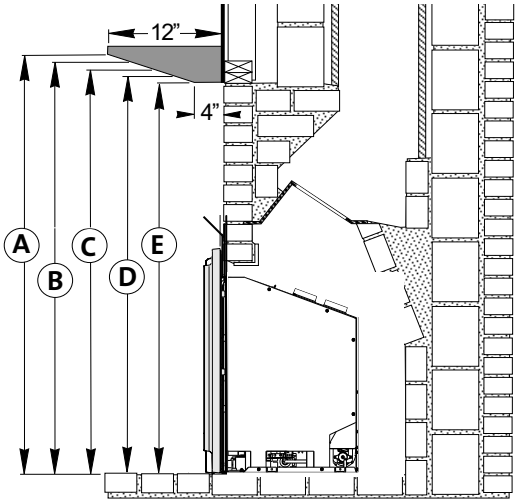

Figure 130. Mantel and ceiling dimensions

Hearth Protection

Hearth protection in front of the GI 645 DV MV must be composed of masonry material extending at least 3 1/8” to each side of the fireplace opening and 12” forward from the fireplace facing material.

A: Hearth Protection Width: from fireplace opening
- Unit flush: Min. 4 5/8”
- Unit raised minimum 6” off floor: 0”

B: Hearth Protection Depth: from fireplace opening
- Unit flush with hearth: 12”
- Unit raised minimum 6” off floor: 0”

C: Side Trim Clearance:
- Up to 6” depth, from fireplace center line: 21 1/8”

D: Side Room Wall Clearance:
- From the fireplace center line: 26 5/8”

E: Top Trim Clearance from hearth: See fig. 129

F: Mantel Clearance from hearth: See fig. 129

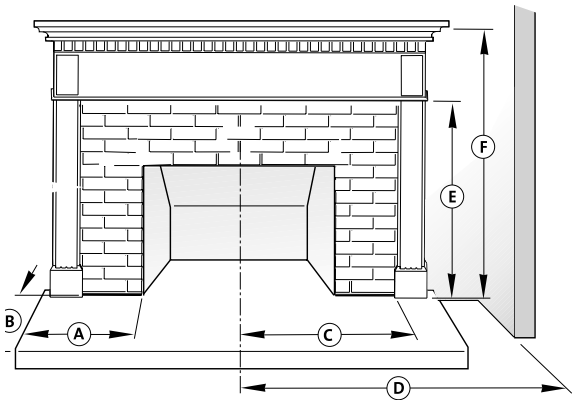

Figure 131. Mantel and ceiling dimensions

GF 300 BV Allagash JøtulBurner™ Rates

Natural Gas
26,000 BTU/hr. maximum input
15,000 BTU/hr. minimum input

Propane
26,000 BTU/hr. maximum input
13,500 BTU/hr. minimum input

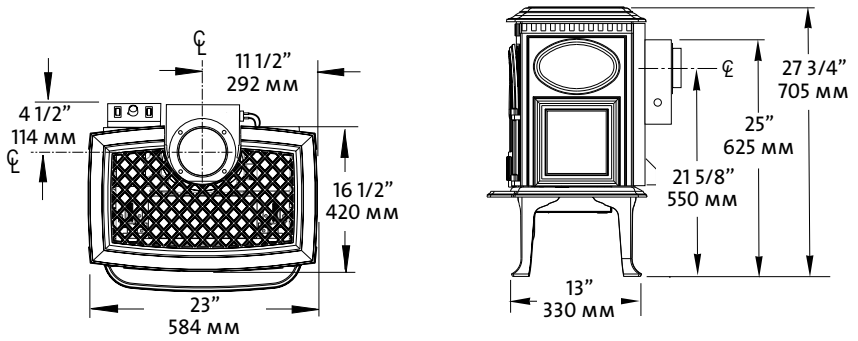

Figure 132 Primary dimensions. With optional Short Legs, reduce height by 2 1/4".

Clearance Requirements

Rear: 2" - from Draft Hood
Ceiling: 32 1/4" - from stove top
Corner: 3" - from stove top
Sides: 3" - from stove top

Alcove Installation

Maximum Alcove Depth:
24"

Minimum Alcove Width:
36"

Minimum Alcove Height:
61"

With Short Legs (6"):
58 3/4"

Hearth Protection

Width: 24"

Depth: 18"

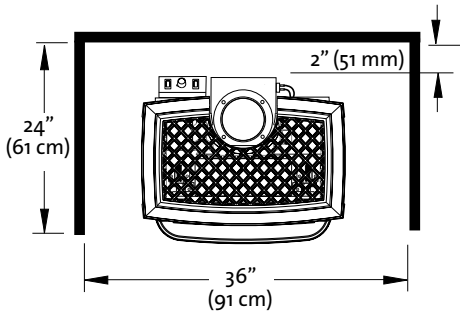

Figure 133 Alcove Installation Clearances.

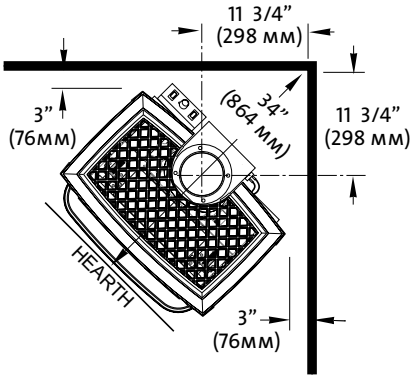

Figure 134
Vent adaptor centerline at minimum clearance to corner walls.

Mantel Clearances

Stove shown with standard legs. With Short Legs, subtract 2 1/4" from the clearances indicated below.

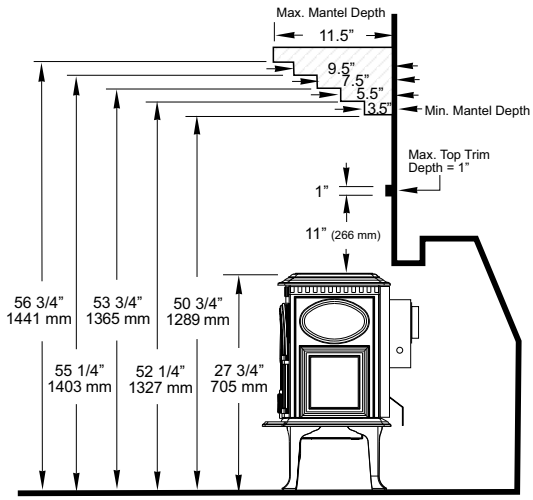

Figure 135. Mantel and Trim specifications -
Stove installed with rear shroud flush to fireplace face.

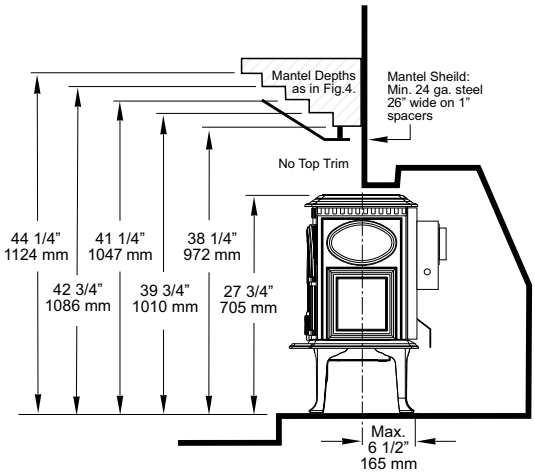

Figure 136 Mantel specifications -
Stove recessed into fireplace no more than 6 1/2".

GF 400 BV Sebago JøtulBurner™ Rates

Natural Gas
40,000 BTU/hr. maximum input
22,000 BTU/hr. minimum input

Propane
40,000 BTU/hr. maximum input
20,000 BTU/hr. minimum input

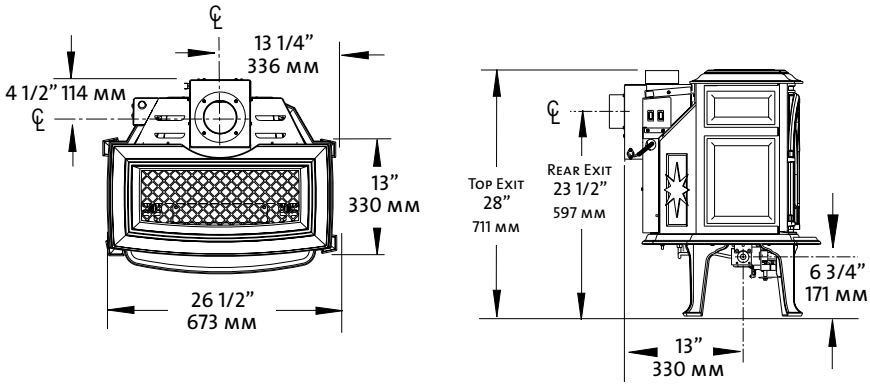

Figure 137 Primary dimensions. With optional Short Legs, reduce height by 2 1/4".

Clearance Requirements

Rear: 3" - from Draft Hood
Ceiling: 32 1/4" - from stove top
Corner: 3" - from stove top
Sides: 3" - from stove top

Alcove Installation

Maximum Alcove Depth:
24"

Minimum Alcove Width:
32"

Minimum Alcove Height:
61"

With Short Legs (6"):
58 3/4"

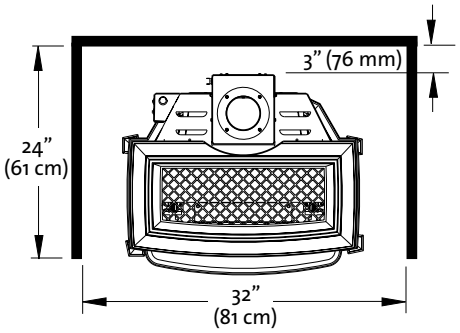

Figure 138 Alcove Installation Clearances.

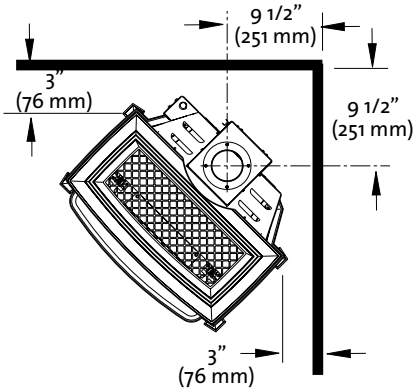

Figure 139
Vent adaptor centerline at minimum clearance to corner walls.

Hearth Protection

Width: 27"

Depth: 14"

Mantel Clearances -

Stove shown with standard legs.
With Short Legs, subtract 2 1/4" from the clearances indicated below.

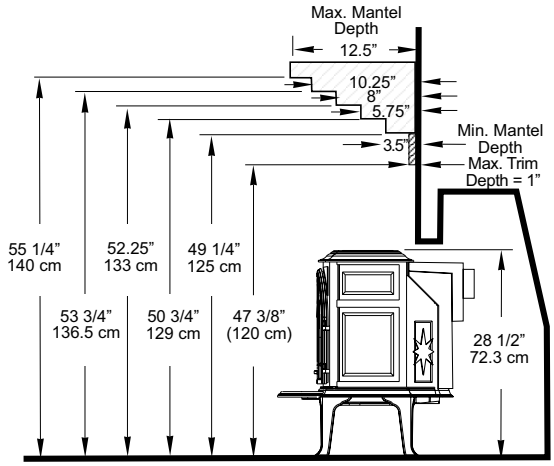

Figure 140 Mantel and Trim specifications -
Stove installed with Top Plate flush with fireplace face.

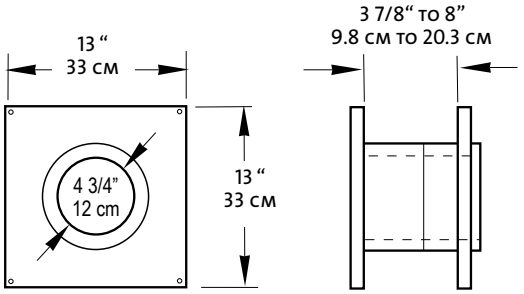

Figure 141 Approved Wall Pass-Through,
Simpson Dura-Vent Wall thimble #3134.

General B-Vent Requirements

The GF 300 BV Allagash and GF 400 BV are specifically designed to operate using 4" Type B vent pipe components or a Listed Flexible gas liner.

All venting components must be installed in accordance with the terms of their listing and manufacturer's instructions.

The minimum height of a vertically terminated system shall be no less than 7 ft. and the maximum height shall be no more than 35 ft.

With steep roofs, nearby trees, and in predominant windy conditions, poor draft or down draft conditions can occur. In these cases, increasing the height of the vent or high wind termination caps may improve the situation.

ELBOWS: If an offset or elbow is necessary in the vertical rise, it is important to support the vent pipe every three feet, to avoid excessive stress on the offsets.

Whenever possible use 45° elbows opposed to 90° elbows. This offers less restrictions for the flow of flue gases.

Maximum 90° elbows: 3
Maximum 45° elbows: 4

Total maximum horizontal run anywhere in the vent system is 4 feet. The distance between any 45° elbows is considered a horizontal run.

Any Type B vent passing through a roof must have a flashing, storm collar, thimble and a Type B cap is required. See diagrams, page 10.

Venting on the Allagash CANNOT be less than 4" in diameter or greater than 4" in diameter.

Figure 143. B-Vent termination requirements.

Roof Pitch H (Ft.)
Flat to 6/12..... 1.0*
Over 6/12 to 7/12..... 1.25*
Over 7/12 to 8/12..... 1.5*
Over 8/12 to 9/12..... 2.0*
Over 9/12 to 10/12..... 2.5*
Over 10/12 to 11/12..... 3.25
Over 11/12 to 12/12..... 4.0
Over 12/12 to 14/12..... 5.0
Over 14/12 to 16/12..... 6.0
Over 16/12 to 18/12..... 7.0
Over 18/12 to 20/12..... 7.5
Over 20/12 to 21/12..... 8.0
* 3 foot (91 cm) minimum in snow regions

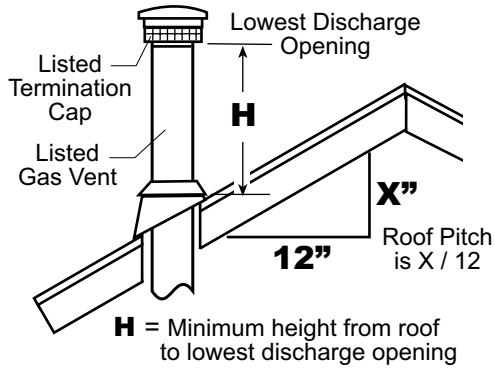

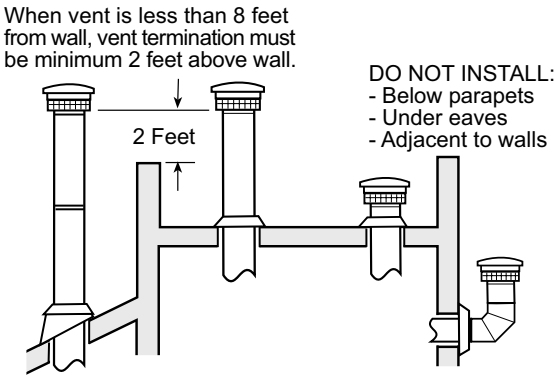

Any unused flue or masonry enclosure can be used as a passage way for venting, but the flue must be relined using Type B 4" vent or Listed Flexible Gas Liner.

The remaining space around the liner in a masonry or zero-clearance flue CANNOT be used to vent any other appliance.

When terminating through the roof refer to figure for proper vent termination height.

NO venting may terminate horizontally or below roof eaves.

Passage through combustibles (walls, ceilings) must be with Type B venting and must maintain listed clearances.

Any horizontal run should have an upward slope of 1/4" per foot toward the termination cap.

When venting through a thimble into a masonry flue, any venting exposed in the room must be Type B venting, or a flexible liner sleeve within 24 ga. 6" stove pipe.

Listed Flexible Gas Liners may not be exposed in any living space.

When 6" diameter decorative pipe is installed to cover the venting any Listed Flexible Gas liner must be connected directly to the stove's draft hood.

Use of single wall connector pipe as a vent is prohibited for use with the GF 300 Allagash B-Vent stove.

A firestop is required at every floor.

Venting through a Masonry or Prefabricated Manufactured Chimney

Vent Requirements, cont'd.

Any venting that is exposed above the first floor, regardless of attic space or living space, must be enclosed. Always maintain the required clearance from all sides of the vertical vent system according to manufacture.

Installation of any components not manufactured or approved by Jøtul or failure to meet all clearance requirements will void all warranties and could result in property damage, bodily injury, or serious fire.

Never modify any venting component, or use any damaged venting product.

THE GAS APPLIANCE AND VENT SYSTEM MUST BE VENTED DIRECTLY TO THE OUTSIDE OF THE BUILDING, AND NEVER ATTACHED TO A CHIMNEY SERVING A SOLID FUEL OR GAS BURNING APPLIANCES.

BE SURE TO MAINTAIN THE PROPER CLEARANCES TO COMBUSTIBLES AS DEFINED IN THIS MANUAL AND IN THE INSTRUCTIONS PROVIDED WITH EACH VENTING COMPONENT.

When installing at an altitude above 2000 ft. the minimum vertical rise is 12 ft. from the draft hood.

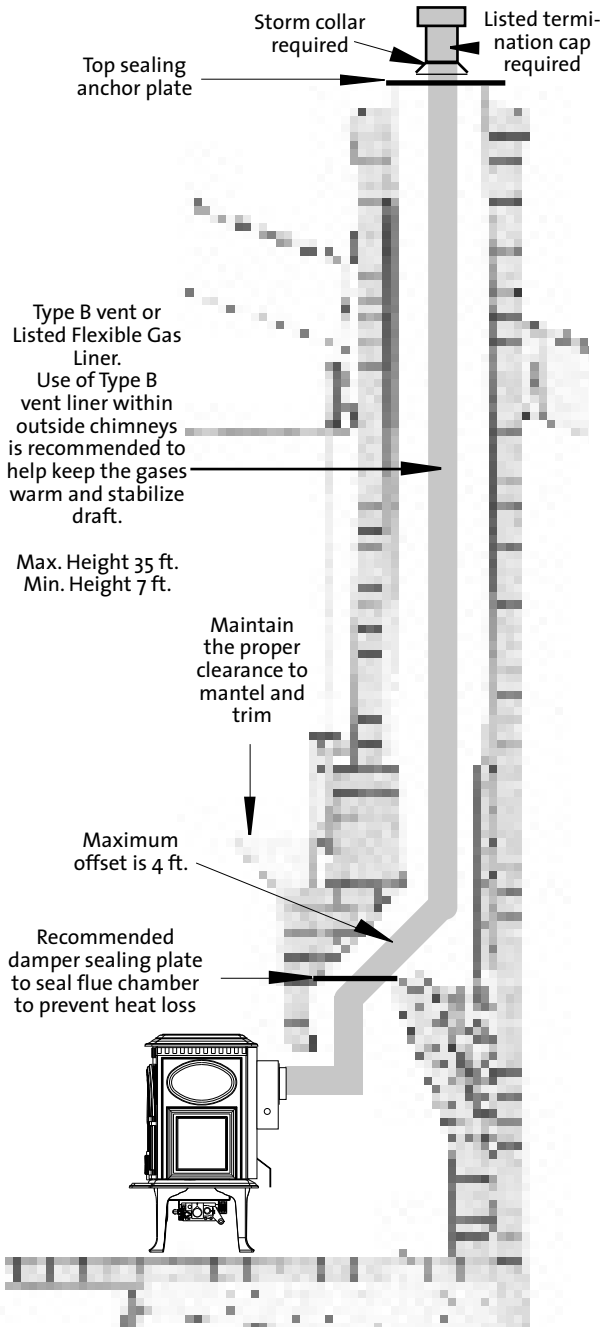

Figure 144 . GF 300 BV venting through a masonry chimney.

NOTE:
Installation at altitude greater than 2000' requires minimum 12 ft. vertical rise from Draft Hood.

Approved B-Vent Configurations

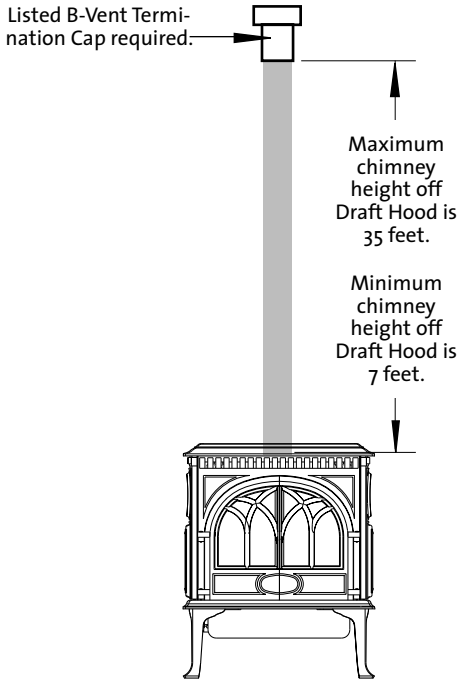

Figure 145

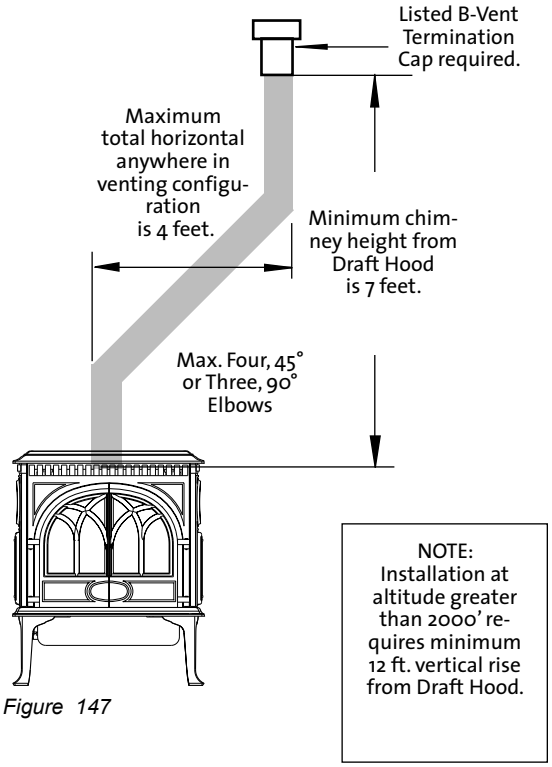

Figure 147

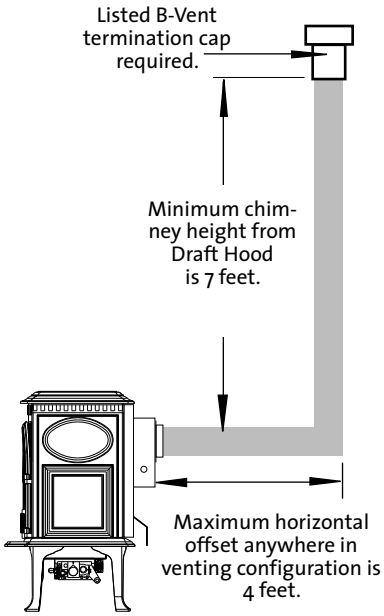

Figure 146

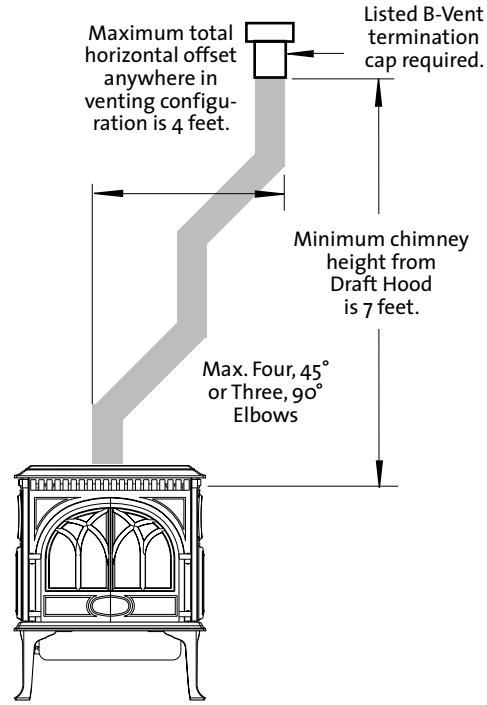

Figure 148

This page is intentionally left blank

Jøtul has a policy of constant improvement and upgrading. Products therefore may differ in specification, design, material, cost or dimensions at any time without prior notice.

April 2020 - Rev. D